25th ANNIVERSARY

SLIDEWAYS

Custom and Standard Plastic Parts for Conveyors and Machinery

# WE REDUCE FRICTION

On Your Machinery • In Your Operation

GUIDE RAILS

CONVEYOR COMPONENTS

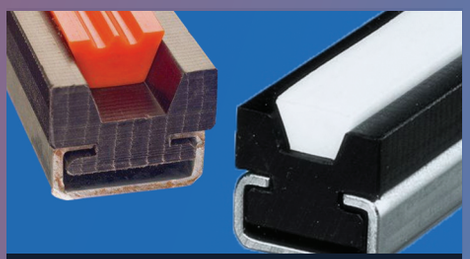

BELT GUIDES

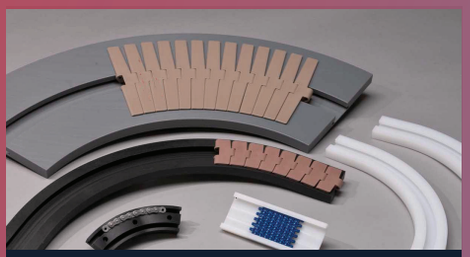

SLIDETRAX

CHAIN GUIDES

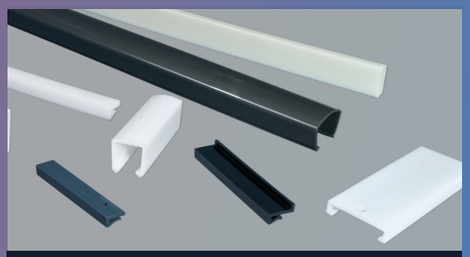

EXTRUDED PROFILES

PRECISION MACHINING

## INDUSTRIES WE SERVE

- Beverage
- Dairy
- Bakery
- Food Processing
- Conveyor Integration
- Package Handling

# THE SLIDEWAYS ADVANTAGE

## Save Money with Efficient Manufacturing

We're able to produce both small and medium-sized runs without the high tooling costs of extrusions or castings.

## Replace Steel & Aluminum Parts

Plastic components last longer, operate more quietly, and weigh less than metal parts. Our sprockets have replaced steel in packaging and wastewater treatment applications.

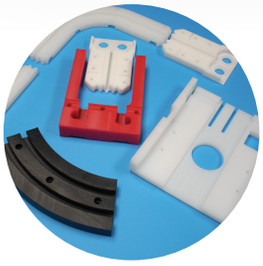

## Solve Your Application Challenge

Our engineers can work from your specs or reverse engineer a sample to produce a custom part. Whether your design is simple or complex, we can create the parts you need - fast!

## Meet Your Deadlines

Our dedication to just-in-time delivery has allowed our customers to increase productivity and reduce downtime. In fact, the standard time from order to shipment is just two weeks!

## Handle Temps from Cryogenic to +800°F

The same Slideways chain guides can be used on both spiral freezer conveyors and high-temperature sterilizers. Turn to page 81 to learn more about our applications.

# Table of Contents


Custom Parts and Industries Served ..... 2

Slideways Materials
- UHMW Materials ..... 4
- Non-UHMW Materials ..... 5

BluLub ..... 6

Metal Detectable ..... 7

Slideways Component Upgrades ..... 8

Slideways Successes ..... 10

Conveyor Components

Wear Strips for Modular Belting ..... 11

Slide-Trax
- SlideTrax Curves and Straights ..... 12
- Two-Piece Radius Curve Wear Strips ..... 13
- Knuckle Chain Trax ..... 13
- Custom Trax ..... 14

Guide Rails and Accessories
- Stainless UHMW Guide Rail ..... 15
- Aluminum Extrusions ..... 16
- UHMW Guide Rail ..... 16
- UHMW Angle and Channel Guide ..... 16

Extruded Profile
- UHMW Rail Covers/JLegs ..... 17
- UHMW Snap-On ..... 18
- MD-Nylon Snap-On ..... 19
- High-Temp PTFE (Teflon®) Snap-On ..... 19

Guide Rail Accessories (see also p.53) ..... 20

Slide Rails ..... 20

Screw Conveyor Hanger Bearings ..... 21

Slideways UHMW Slider Beds ..... 22

Chain and Belt Guides

Chain Guides
- ANSI Roller Chain Guides — Plain ..... 24
- ANSI Roller Chain Guides — Mounted ..... 25
- Extended Pitch Chain Guide ..... 26
- Mounting Channel ..... 26
- Custom Chain Guides ..... 27

Belt Guides
- V-Belt Guides — Plain ..... 28
- Round Belt Guides — Plain ..... 28
- Flat Belt Guides — Plain ..... 28
- V-Belt Guides — Mounted ..... 28
- Round Belt Guides — Mounted ..... 28
- Flat Belt Guides — Mounted ..... 28
- Insert for Belt Support or Guide Rail ..... 28

Adhesive-Backed, Cut and Extruded Wear Strip
- Adhesive-Backed 54' Skived Rolls ..... 29
- Adhesive-Backed 50' and 100' Skived Rolls ..... 29
- Cut Wear Strip ..... 29
- Extruded Wear Strip ..... 29

Roller Chain Sprockets ..... 30

Slideways Custom Components ..... 32

Pulleys
- Line Shaft Pulleys ..... 33
- V-Belt Pulleys ..... 33
- Round Belt Pulleys ..... 33
- Custom Pulleys ..... 33

Custom-Made Rollers ..... 34

Roll-End Bearings ..... 35

Solidur Interchange ..... 36

Mounted Bearings

Plastic Block Bearings
- Unit Pillow Blocks ..... 37
- Split Pillow Blocks ..... 37
- 2-Bolt Flanges ..... 37
- 4-Bolt Flanges ..... 37

Thermoplastic Housings - Plastic Inserts
- Pillow Blocks ..... 38
- 2-Bolt Flanges ..... 38
- 3-Bolt Flanges ..... 39
- 4-Bolt Flanges ..... 39
- Plain Bearing Inserts/Shaft Protectors ..... 39

Stamped Galvanized or Stainless Steel Housings
- Pillow Blocks ..... 40
- 2-Bolt Flanges ..... 40
- 4-Bolt Flanges ..... 40

Plain Bearings
- Sleeve and Flange Bearings ..... 41
- Thrust Washers ..... 41

Special Industry Components

Wastewater Treatment
- Wear Strips ..... 42
- Wear Shoes ..... 42
- Heavy-duty Plastic Chain ..... 43

Light-duty Plastic Chain for Check Weighers ..... 43

Dairy and Bakery Chain Guides ..... 44

Specialty Packaging Components ..... 44

Poultry ..... 45

Plastic Replaces Metal in Food Processing ..... 45

Slideways Applications ..... 46

Slideways Conveyor Components Table of Contents ..... 47

Conveyor Side Brackets
- Plastic ..... 48
- Stainless "L" Brackets ..... 50
- Adjustable Heads and Star Knobs ..... 51
- Clamps and Clips ..... 52
- Articulating and Fixed Rods ..... 53
- Roller Guides and Roller Guide Shoes ..... 54
- Transfer Modules ..... 57
- Hinges and Handles ..... 58
- Sensor Clamps ..... 59
- Cross Blocks and Cross Clamps ..... 60
- Dip Tray Supports and Washers ..... 61

Structural Components
- Support Bases and Brackets ..... 62
- Connecting Joints ..... 64
- Plastic Tube Ends ..... 65
- Threaded Stainless Steel Tube Ends ..... 66

Levelers
- Adjustable Levelers ..... 67
- Stainless Steel Wash-Down Levelers ..... 72

Ball Bearing Mounted Units
- 2 Bolt Flanges Solid Housings ..... 74
- 2 Bolt Flanges Watertight Housings ..... 75
- 4 Bolt Flanges Solid Housings ..... 76
- Safety Caps ..... 76
- 4 Bolt Flanges Watertight Housings ..... 77

Material Compatability Chart ..... 78

Engineering Data ..... 80

# Custom Parts

**Slideways** specializes in plastic components for bearing, wear, and power transmission applications. These application specific parts often require unique design considerations and complex shapes or profiles not commercially available. This capability to design and manufacture custom parts produces results for Slideways customers.

Since 1994, we have built a reputation for making quality custom components for packaging machinery and other power transmission and process equipment applications.

Whether your application requires an unusual shape or high-performance materials, Slideways personnel are eager to apply their creativity and experience to your project. Our state-of-the-art machining equipment and software enable us to make complex parts that meet your specifications.

## Customer Service

Our primary focus at Slideways is to provide you with unparalleled customer service. You get the parts you need, delivered on time.

Catalog items are in stock or can be quickly fabricated on specialized equipment from an extensive inventory of raw materials. If you need a custom-designed component we are always ready to use our expertise to come up with the best solution to fit your needs. If you don't see what you need in this catalog, please call to discuss your application.

We acknowledge your order with a ship date that keeps your scheduling needs in mind. Whether you need a few roll end bearings or miles of wear strip, Slideways delivers on time.

## Custom Part Fabrication

The Slideways machine shop is tooled primarily for plastics. Our experience in machining various plastic materials and the capabilities listed below enable us to produce high-quality components for machinery quickly and at a competitive price.

**CNC Routers -** With a machining area of 5' x 12' and a ten-station tool changer, our CNC routers are able to precisely manufacture either a very large part or many small parts from a single sheet of material. Having ten tools available minimizes secondary operations. Typical parts made on these machines include star wheels and SlideTrax straights and curves for conveyor chains and sprockets.

**Profiling -** Slideways produces miles of chain guide, belt guide, and rail covers every year. Our profile machining capability helps our customers order small quantities of special guides without the tooling cost, minimum run, and extended lead time required for a custom extrusion typical of other manufacturers. Products include chain guides, belt guides, and snap-on profiles.

**CNC Turning -** CNC lathes turn parts up to 16" in diameter. Slideways makes a huge variety of bearings, pulleys, and rollers. Inside diameters are often machined so that a ball bearing can be snapped into the ID of pulleys and wheels.

**Vertical Machining Centers -** Our Haas VF-2 has 4-axis capability and a 26" x32" work area, and our Haas VF-4 has a 26" x 50" work area. Both workstations can machine complex shapes in all plastic materials and are very effective for short-run, intricate parts found on packaging machinery such as cam plates, wear parts and guides. These workstations are ideal for unique parts found on process equipment, medical equipment and other specialty applications.

Slideways specializes in components for wear and power transmission applications. The number of industries and applications is vast. If an application can benefit from a lightweight, low-friction, wear- and corrosion-resistant material, Slideways can help. Here is a sample of industries we serve and the types of parts and materials that apply:

## Sample of Industries Served

| Industry | Materials | Parts Manufactured (sample lists) |
|---|---|---|
| Agriculture | UHMW, UV/UHMW and MD-Nylon parts | Bearings, sprockets chain tensioners, chute liners, Drag Flites, pulleys, hanger bearings. |
| Bakeries | HT/UHMW, UHMW, OF/UHMW, Delrin, Teflon | Wear strips and corner track for plastic modular belts and side flexing chain, sprockets, chain guides, roller end bearings, belt scrapers |
| Beverage | UHMW, DS/UHMW, OF/UHMW, Ceram-P, MD-Nylon | Wear strips and corner track for plastic modular belts and side flexing chain, sprockets, chain guides, roller end bearings, belt scrapers, pulleys |
| Bottling, Canning, Packaging Plants | UHMW, DS/UHMW, OF/UHMW, MD-Nylon | Wear strips and corner track for plastic modular belts and side flexing chain, sprockets, chain guides, roller end bearings, pulleys |
| Conveyer Systems | All UHMW grades, MD-Nylon | Wear strip, belt guides, corner tracks, guide rails |
| Electronics | AS/UHMW | Chain guides, wear strips, pulleys, bearings |
| Food Packaging and Processing | UHMW, HT/UHMW, OF/UHMW | Wear strips and corner track for plastic modular belts and side flexing chain, sprockets, chain guides, roller end bearings, pulleys and cutting boards, cams |
| Package Handling, Distribution Centers | Repro/UHMW, DS/UHMW, OF/UHMW | Chute liners, chain guides, wheels, rollers |
| Pharmaceutical Packaging Equipment | UHMW, HDPE, Acetal, OF/Nylon | Star wheels, brackets, wheels, corner tracks, wear strips |

Other industries that benefit from Slideways plastic components include amusement parks, exercise equipment manufacturers and marine equipment manufacturers.

# Slideways Materials

**All UHMW grades offer the benefits of:**

- Noise reduction
- Self-lubrication
- Chemical resistance
- Corrosion resistance
- Low friction
- No moisture absorption

## UHMW Materials

| Material | Benefits | Industries | Applications | |
|---|---|---|---|---|
| Nat. UHMW | • Meets FDA and USDA guidelines<br>• 3-A Dairy approved | • Agriculture<br>• Bottling<br>• Canning<br>• Conveyor manufacturers<br>• Food processing<br>• Packaging<br>• Material handling<br>• Waste water treatment | • Augers<br>• Bearings<br>• Chain sprockets<br>• Chain guides<br>• Chain tensioners<br>• Chute liners<br>• Deboning tables<br>• Filter press plates<br>• Flight wearshoes<br>• Flights<br>• Gears<br>• Guide rails | • Hopper liners<br>• Idlers<br>• Mixer bushings<br>• Mixer paddles<br>• Plow blades<br>• Roller chain<br>• Scraper blades<br>• Spiral freezers<br>• Spreaders<br>• Sprockets<br>• Trough liners<br>• Wearstrips |
| Repro/UHMW | • Reprocessed UHMW<br>• Available in green or black | SEE NAT. UHMW | SEE NAT. UHMW | |
| OF/UHMW (Oil-filled) | • Oil-filled for lower friction<br>• Meets FDA and USDA guidelines | • Agriculture<br>• Bottling<br>• Dairy<br>• Food processing/ handling<br>• Packaging | • Bottling cam guides<br>• Chain radius guides<br>• Chain tensioners<br>• Chain wearstrips<br>• Entry/exit tables | • Bow curves<br>• Roll-end bearings<br>• Roller chain guides<br>• Star wheels<br>• Wearstrips |
| CS/UHMW (Tivar® Clean-Stat) | • Anti-static<br>• Meets FDA and USDA guidelines<br>• 3-A Dairy-approved | • Food packaging<br>• Bulk food handling | • Chute liners<br>• Fabricated parts | • Hopper liners<br>• Vibratory feeder pans |
| CP/UHMW (Ceram P®) | • Glass-filled UHMW<br>• High load, high-speed<br>• High tensile strength | • Agriculture<br>• Lumber processing<br>• Material handling<br>• Pulp and paper mills<br>• Steel mills | • Bearing pads<br>• Chain guides<br>• Rollers | • Bushings<br>• Pump impellers<br>• Wire belt pulleys |
| DS/UHMW (DrySlide) | • Anti-static<br>• Ideal for dusty environments<br>• Helps reduce surging<br>• Non-marring<br>• Dry lubricant formula | • Unit material handling<br>• Conveyer equipment<br>• Parcel handling<br>• Distribution centers | • Belt skirting<br>• Chute liners<br>• Dead plates<br>• Diverter bars<br>• Gravity flow apps | • Hopper liners<br>• Guide rollers<br>• Roller covers<br>• Transfer plates<br>• Wearstrips |
| AS/UHMW (Anti-Static) | • Anti-static formula<br>• Protects against electrical charge build-up | • Chemicals<br>• Explosives<br>• Electronics<br>• Grain handling<br>• Package handling | • Electronics assembly<br>• Bearings<br>• Chain guides<br>• Chute liners<br>• Conveyor components<br>• Discharge spout liners<br>• Flights | • Guide rails<br>• Robotics parts<br>• Slide liners<br>• Table surfaces<br>• Transfer plates<br>• Tough liners<br>• Wearstrips |
| HT/UHMW (High-Temperature) | • High-temperature UHMW<br>• 275°F operating temperature<br>• Inhibits oxidation, extends material wear-life<br>• Excellent release characteristics<br>• Meets FDA guidelines, USDA and 3-A Dairy compliant | • Baking<br>• Conveyer manufacturing<br>• Food processing<br>• Meat & poultry processing<br>• Pet food manufacturing | • Chain guides<br>• Wearstrips, pads, and plates | • Machined parts<br>• Drying equipment |
| UV/UHMW (Ultraviolet-Protected) | • Ultraviolet resistant<br>• Retains key properties up to 3X longer during outside use than non-UV formulations | • Agriculture<br>• Marine/Seaports<br>• Recreation<br>• Transportation | • Amusement parks<br>• Boat rubrails<br>• Combine skid plates<br>• Dump trailer liners<br>• Plow board liners<br>• Sand/salt boxes | • Fertilizer spreaders<br>• Sprockets<br>• Trough liners<br>• Water slide liners<br>• Wearstrips |
| Tivar 88® (Special lining formula) | • Promotes reliable, steady bulk material flow<br>• Low coefficient of friction<br>• No moisture absorption<br>• Reduces or eliminates arching, ratholing, and erratic flow | • Power generating plants<br>• Rail car liners<br>• Steel mills<br>• Cement plants<br>• Chemical plants<br>• Grain handling<br>• Mining | • Belt scrapers<br>• Screw conveyer liners<br>• Chain conveyor flights<br>• Chute liners<br>• Vibratory feeder liners<br>• Transfer chute liners<br>• Chain guides<br>• Drag chain conveyor liners | • Bunker liners<br>• Silo liners<br>• Slider beds<br>• Storage bin liners<br>• Conveyor skirting<br>• Cyclones<br>• Hopper liners<br>• Wearstrips |

| Material | Benefits | Industries | Applications |
|---|---|---|---|
| **HDPE** | • High-density P/E<br>• Low cost<br>• Meets FDA guidelines, USDA and 3-A Dairy compliant | • Low-wear applications | • Cutting boards<br>• Star wheels |
| | • Natural nylon<br>• Toughness<br>• Meets FDA guidelines | | • Machine parts<br>• Sprockets |
| **MD-Nylon** | • MDS-filled Nylon<br>• High-speed, high-load capacity | • Conveyers<br>• Packaging machinery | • Corner tracks<br>• Sprockets<br>• Chain guides<br>• Wheels<br>• Cams |
| **Acetal** | • Acetal or Delrin©<br>• Excellent stability<br>• Meets FDA guidelines | • Pharmaceutical equipment | • Cams<br>• Wheels<br>• Machine components |
| **PTFE** (Glass-filled) | • Teflon©<br>• Operates to 450˚F<br>• Glass-filled and graphite-filled grades improve load capacity | • Bakery equipment<br>• Chemical applications | • Wear strips<br>• Bearings<br>• Wear pads |
| **Lexan®** | • Impact-resistant<br>• Clear | • Packaging equipment | • Covers<br>• Guards |
| **OF Nylon** | • Oil-filled nylon<br>• High load capacity<br>• Low coefficient of friction | • Agriculture<br>• Construction<br>• Conveyors | • Sprockets<br>• Bushings<br>• Wear parts |
| **Wood** (Lube-Filled) | • Lubricant filled<br>• Hard maple | • Conveyors<br>• Screw conveyors | • Bow curves<br>• Chain guides<br>• Hanger bearings |
| **Ertalyte® (PET-P)**<br>**Ertalyte®-TX** (internally lubricated) | • Excellent dimensional stability<br>• High strength & stiffness<br>• Good wear resistance<br>• Resistant to acids & chlorine bleach solutions<br>• FDA compliant | • Food processing<br>• Pharmaceuticals<br>• Packaging equipment<br>• Process & test equipment | • Machine components<br>• Manifolds<br>• High pressure valves |
| **Fluorosint® (PTFE)** | • Chemical resistant<br>• Continuous operation to 500˚F<br>• Higher load capacity than PTFE<br>• Fluorosint®207 is FDA compliant | • Pumps<br>• Fluid power<br>• Food processing | • Machine components<br>• Bearings & bushings<br>• Valve seats |
| **Ketron® PEEK**<br>**PEEK GF30** (30% glass filled)<br>**PEEK CA30** (30% carbon fiber reinforced)<br>**PEEK LSG** (Life Science Grade) | • Chemical resistant<br>• Very low moisture absorption<br>• Good wear and abrasion resistant<br>• Unaffected by continuous exposure to hot water or steam | • Pumps<br>• Fluid power<br>• Machine components<br>• Medical components | • Bearings & seals<br>• Pump wear rings<br>• Chemical process components |

**Rulon®** Wide temperature range (-400˚ to +550˚F), low coefficient of friction, abrasion resistance and chemically inert

**Torlon®** Available unfilled, glass and carbon filled. High temperature (500˚F), excellent wear characteristics

**Micarta®** A thermo set plastic known for excellent electrical insulating characteristics

**Ultem®** Resistant to steam and hot water, excellent dielectric properties, inherently flame retardant

**PVC** Pipe is used for rollers and sheets for structural applications

**Polysulfone** A transparent material most often used for its dielectric characteristics

# BluLub®

**Enhanced – Performance – UHMW-PE**

***BluLub®*** *is a new high-performance compounded UHMW-PE material with the latest generation of solid lubricants.* ***BluLub®*** *contributes to improve PV-properties compared to standard UHMW-PE, especially in applications with limited lubrication, higher speeds and/or higher loads.* ***BluLub®*** *requires less energy and with the lower coefficient of friction, improves the product stability and wear life of chains and modular belts.*

### *Properties:*

- *UHMW-PE Polyethylene with molecular density 9,200,000 g/mol.*
- *Operating temperature: -40 to + 80°C (-40 to 176°F)*
- *BluLub complies with the Code of Federal Regulations of FDA*

## *Advantages:*

- ***Running dry***
- ***High speed***
- ***Reduced noise and squeaking***
- ***Lower Coefficient of Friction***
- ***Longer wearlife***
- ***Less energy consumption***
- ***Smooth and quiet chain running***

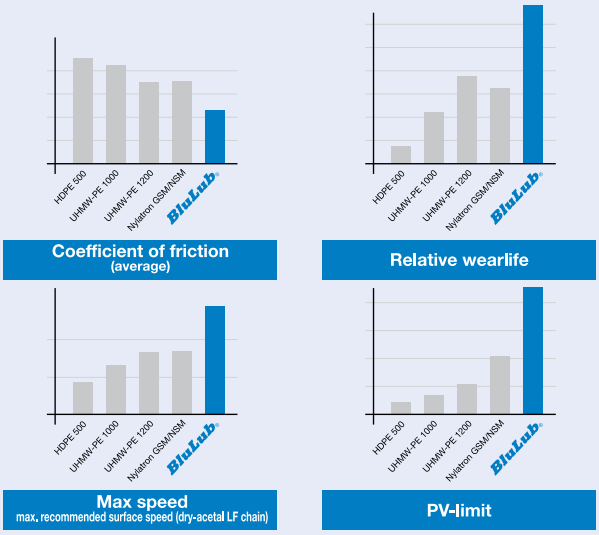


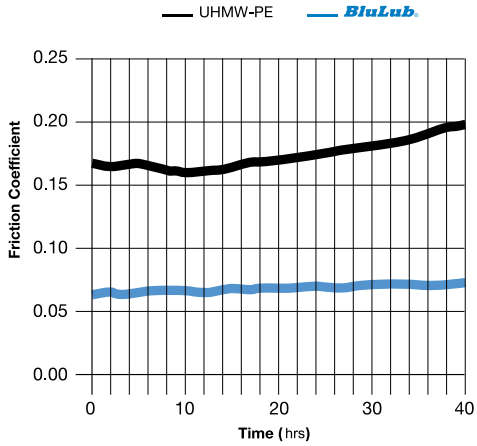


Less Friction Compared to UHMW-PE

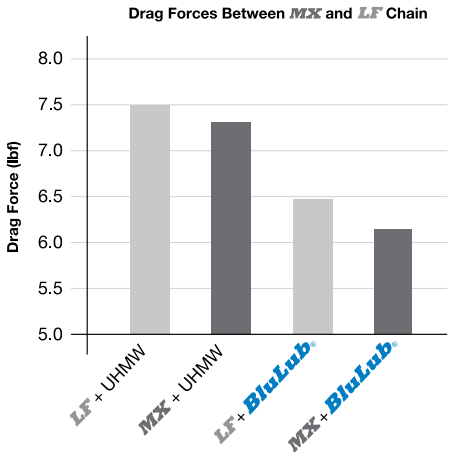


Chain / Wear Strip Configuration

# Slideways Metal Detectable UHMW

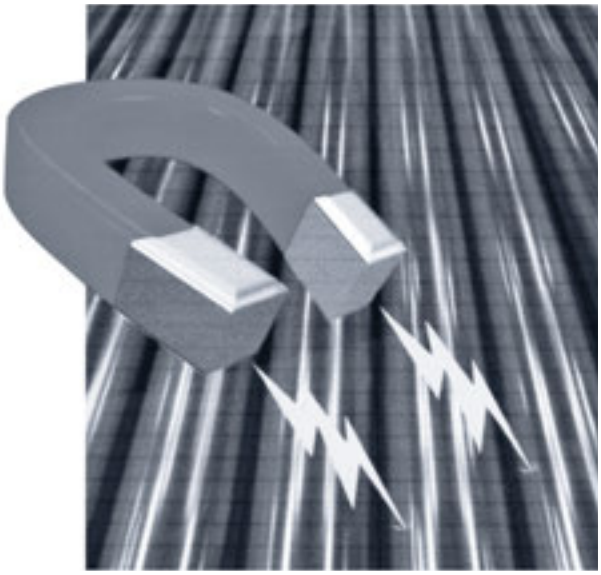

**Food Processors: Reduce the Risk of Liability and Recalls with Slideways Metal Detectable UHMW Components for Food Processing Equipment**

**Catch contamination through Metal Detectors**
**Contrasting color enables Visual Detection**

**This UHMW material can help reduce waste and costly product recalls**

Additional Metal Detectable Materials:

Acetal
Nylon
PEEK

**Metal Detectable UHMW Chain Guide**

**Replace your existing plastic components with METAL DETECTABLE chain guides, wear strips, belt guides and other custom parts from Slideways**

**PROPERTIES OF METAL DETECTABLE UHMW**

| Property | Units | UHMW |
|---|---|---|
| Density | g/cm3 | 0.949 |
| Elongation | % | 320 |
| Wear by sand-slury test | Nat. UHMW =100 | 88 |
| Constant service temperature-max. | F° | 180 |

**Applications**

- wear-strips
- sprockets
- chain guides & tracks
- pillow blocks
- bushings and bearings
- gears
- guides
- scraper blades
- mixer components

Common food applications that benefit from the use of Metal Detectable Material:

- Frozen & prepared foods
- Snack Foods
- Cheese
- Candy
- Soups & Chili
- Chips & Tortillas
- Ice Cream
- Bread & Pastries

## Slideways component upgrade saves Time & Money compared to new

Slideways provides complete conveyor retrofit services from design to installation. We are able to offer components from top to bottom with custom fabricated tracks and wear strips to levelling feet.

**The Slideways retrofit provides lower cost upgrades**
**We offer shorter installation times that provide shorter down time windows.**

**Engineering & Design:**

- What track and wear strip materials are best suited to the application for long life and quiet operation?
- Are there nose bar and return options that are more efficient?
- What chain or belt design and material is best suited for the application?

**Precision Machining:**

- Components machined to exact specifications for each applications
- Machining allows for mixing materials to provide longer life and superior perfomance. anufactures Hanger Bearings in a variety of materials so you can be sure of using the best performing part for your application. The most common styles are shown below. Custom Hanger Bearings can be fabricated in other sizes and materials based on your prints or supplied samples.

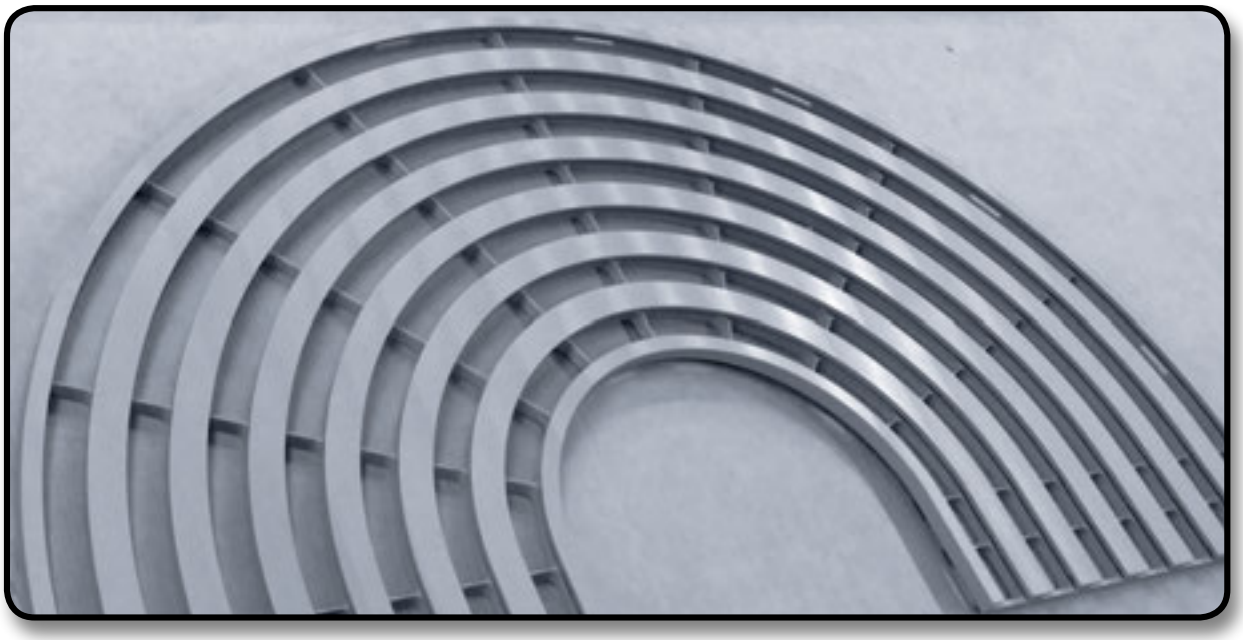

**Standard Parts:**

- Bearings, guide rail, levelers, brackets, adjusting rods and any other component required for complete assembly

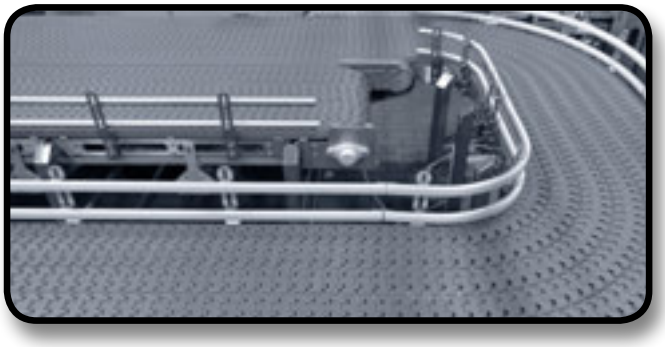

## Slideways component upgrade saves Time & Money compared to new

**Post Build Support & Service:**

- Coordinate with our installation crew and user maintanence team to assure proper operation on start up.
- Make any adjustments to the system if required.
- Periodic follow up to assure customer satisfaction

- Slideways offers more than 20 years of experience in providing quality components for conveyor and packaging equipment.
- We work with a variety of plastic materials on a daily basis and have the knowledge to provide the correct material for every application

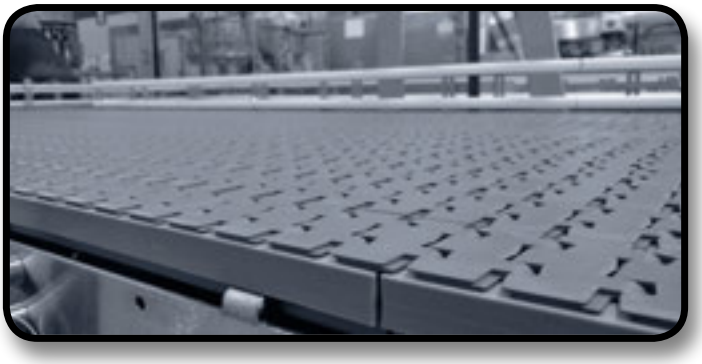

**Contact Slideways to provide for all of your conveyor upgrade opportunities!**

# Slideways Successes

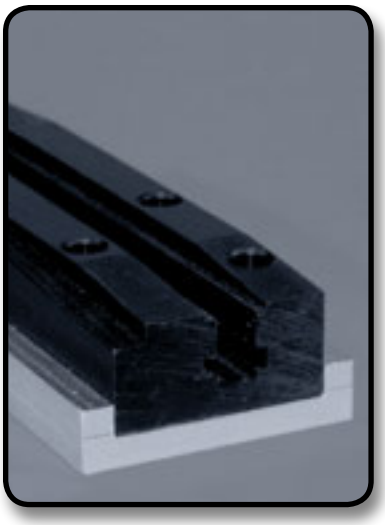

## Circuit Board Assembly Machine

**The Challenge:** The existing part could not stay flat. The warped part damaged leads on the electronic components, which caused boards to be rejected. And static build-up on the part also created rejects.

**The Slideways Solution:** Slideways worked closely with the customer to determine how the existing design was failing. The customer wanted to stay with UHMW for its no-maintenance, long-life properties. Using our knowledge of the application and properties of UHMW, we designed a new part comprised of an aluminum base and an Anti-Static UHMW chain guide. The base is mechanically fastened to the chain guide, giving the UHMW the stability it needs to allow proper setting of each electronic component in the grippers and final installation in the circuit board.

## Belt Guides

**The Challenge:** The anti-static acetal belt guide being used in a glass manufacturing plant was contaminating the product.

**The Slideways Solution:** Slideways designed a UHMW guide that could be made in 20' lengths which not only solved the contamination problem, it reduced installation time, increased guide longevity, reduced cost, and extended belt life.

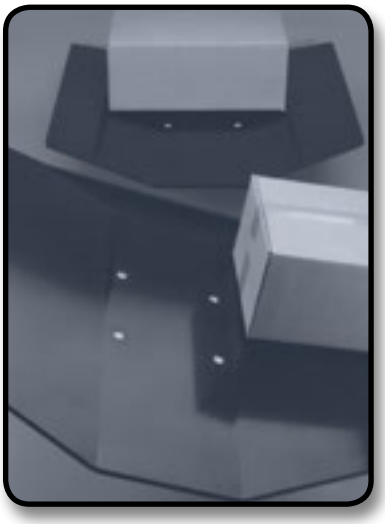

## ABS Tilt Tray Application

**The Challenge:** A central distribution center (CDC) for a nationwide retailer was having trouble with its conveyer. Tilt trays would occasionally fail to return to a horizontal position after dumping their load. When the conveyer attempted to place a package on the vertical tray it would jam the machine, typically damaging between one to ten trays per occurrence! The customer was very concerned about the high cost of replacement plywood tilt trays from their conveyor OEM.

**The Slideways Solution:** Cost was the primary driver for this project, so we worked with our distributor and the CDC to develop a lower cost tray. ABS plastic was selected for the trays because it is durable, rigid, relatively easy to bend when heated, and less expensive than plywood. A prototype made of 3/8" thick ABS had the right combination of rigidity, bendability, ease of assembly, and low price. Slideways has manufactured several lots of tilt trays for the customer. These ABS tilt trays have considerably lowered maintenance costs for the customer.

# Wear Strips For Plastic Modular Belts

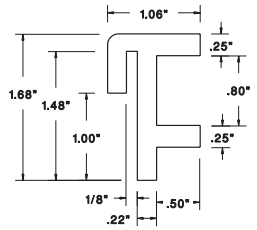


UHMW: 3201015
OF/UHMW: 3203015

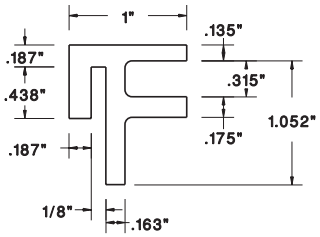


UHMW: 3201016
OF/UHMW: 3203016

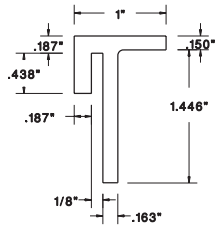


UHMW: 3201017
OF/UHMW: 3203017

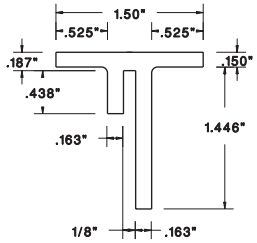


UHMW: 3201018
OF/UHMW: 3203018

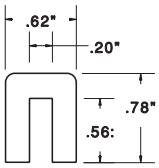


OF/UHMW: 3203021

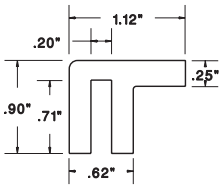


OF/UHMW: 3203022

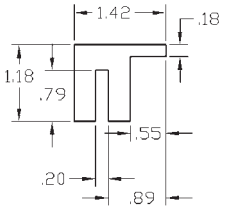


UHMW: 3201124
OF/UHMW: 3203124

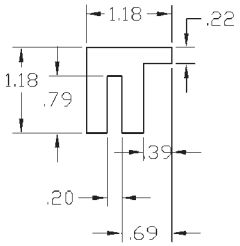


UHMW: 3201125
OF/UHMW: 3203125

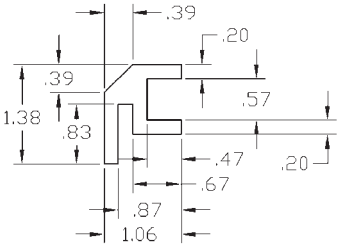


UHMW: 3201126
OF/UHMW: 3203126

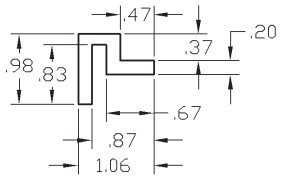


UHMW: 3201127
OF/UHMW: 3203127

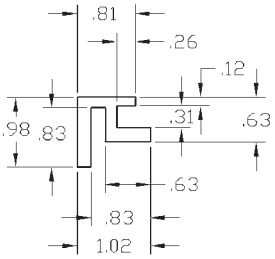


UHMW: 3201128
OF/UHMW: 3203128

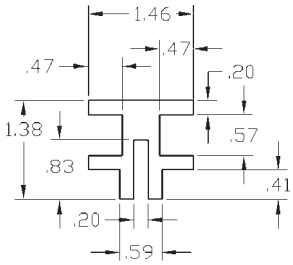


UHMW: 3201129
OF/UHMW: 3203129

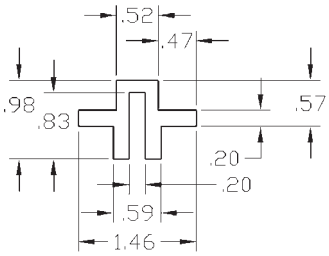


UHMW: 3201130
OF/UHMW: 3203130

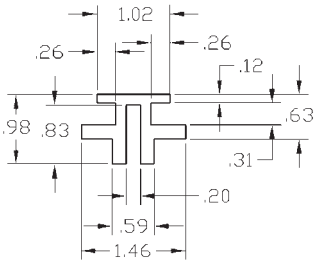


UHMW: 3201131
OF/UHMW: 3203131

**Note:** *Custom guides for modular belts can be fabricated in all UHMW grades and MD-Nylon.*

**SlideTrax** for side flexing and straight running chain is a convenient way to build new conveyors and refurbish existing ones. Our one-piece design, CNC machined to the chain manufacturer's specification, is made to the exact radius you need and incorporates the proper guide clearance. With clearance established in a single unit, installation time and quantity of fasteners required are greatly reduced.

The standard length of SlideTrax is 10'. Please let us know if you require SlideTrax in a different length.

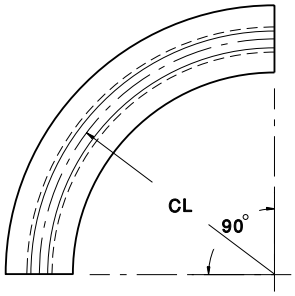


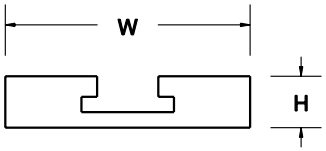


TAB DESIGN

## SlideTrax Curves and Straights for Side Flexing Chain

| | | | | Natural UHMW | | | Black Repro UHMW | | |
|---|---|---|---|---|---|---|---|---|---|
| | | | | CURVE SECTIONS | | STRAIGHTS | CURVE SECTIONS | | STRAIGHTS |
| Chain Model # | Flight Width | Standard Dimensions W | H | Center Line Radius | SlideTrax P/N | SlideTrax P/N | Center Line Radius | SlideTrax P/N | SlideTrax P/N |
| 880T | K325 | 4 | 1 | 18 | 27010118 | 280101 | 18 | 27020118 | 280201 |
| 881T | | | | 24 | 27010124 | | 24 | 27020124 | |
| 879T | | | | 30 | 27010130 | | 30 | 27020130 | |
| 880T | K450 | 5 | 1 | 24 | 27010224 | 280102 | 24 | 27020224 | 280202 |
| 881T | | | | 30 | 27010230 | | 30 | 27020230 | |
| 879T | | | | 36 | 27010236 | | 36 | 27020236 | |
| 882T | K450 | 5 | 1-1/4 | 24 | 27011424 | 280114 | 24 | 27021424 | 280214 |
| | | | | 30 | 27011430 | | 30 | 27021430 | |
| | | | | 36 | 27011436 | | 36 | 27021436 | |
| 882T | K750 | 8 | 1 -1/4 | 24 | 27011524 | 280115 | 24 | 27021524 | 280215 |
| | | | | 30 | 27011530 | | 30 | 27021530 | |
| | | | | 36 | 27011536 | | 36 | 27021536 | |
| 882T | K100 | 10-1/2 | 1-1/4 | 24 | 27011624 | 280116 | 24 | 27021624 | 280216 |
| | | | | 30 | 27011630 | | 30 | 27021630 | |
| | | | | 36 | 27011636 | | 36 | 27021636 | |
| 882T | K120 | 12-1/2 | 1-1/4 | 24 | 27011724 | 280117 | 24 | 27021724 | 280217 |
| | | | | 30 | 27011730 | | 30 | 27021730 | |
| | | | | 36 | 27011736 | | 36 | 27021736 | |
| 882T | K450 | 5 | 1-3/8 | 24 | 27010324 | 280103 | 24 | 27020324 | 280203 |
| | | | | 30 | 27010330 | | 30 | 27020330 | |
| | | | | 36 | 27010336 | | 36 | 27020336 | |
| 882T | K750 | 8 | 1-3/8 | 24 | 27010424 | 280104 | 24 | 27020424 | 280204 |
| | | | | 30 | 27010430 | | 30 | 27020430 | |
| | | | | 36 | 27010436 | | 36 | 27020436 | |
| 882T | K100 | 10-1/2 | 1-3/8 | 24 | 27010524 | 280105 | 24 | 27020524 | 280205 |
| | | | | 30 | 27010530 | | 30 | 27020530 | |
| | | | | 36 | 27010536 | | 36 | 27020536 | |
| 882T | K120 | 12-1/2 | 1-3/8 | 24 | 27010624 | 280106 | 24 | 27020624 | 280206 |
| | | | | 30 | 27010630 | | 30 | 27020630 | |
| | | | | 36 | 27010636 | | 36 | 27020636 | |
| 1873T | K325 | 4 | 1-3/8 | 18 | 27010718 | 280107 | 18 | 27020718 | 280207 |
| | | | | 24 | 27010724 | | 24 | 27020724 | |
| | | | | 30 | 27010730 | | 30 | 27020730 | |
| 1873T | K450 | 5 | 1-3/8 | 18 | 27010818 | 280108 | 18 | 27020818 | 280208 |
| | | | | 24 | 27010824 | | 24 | 27020824 | |
| | | | | 30 | 27010830 | | 30 | 27020830 | |
| 1873T | K600 | 61/2 | 1-3/8 | 18 | 27010918 | 280109 | 18 | 27020918 | 280209 |
| | | | | 24 | 27010924 | | 24 | 27020924 | |
| | | | | 30 | 27010930 | | 30 | 27020930 | |
| 1873T | K750 | 8 | 1-3/8 | 18 | 27011018 | 280110 | 18 | 27021018 | 280210 |
| | | | | 24 | 27011024 | | 24 | 27021024 | |
| | | | | 30 | 27011030 | | 30 | 27021030 | |
| 1873T | K100 | 10-1/2 | 1-3/8 | 18 | 27011118 | 280111 | 18 | 27021118 | 280211 |
| | | | | 24 | 27011124 | | 24 | 27021124 | |
| | | | | 30 | 27011130 | | 30 | 27021130 | |
| 1873T | K120 | 12-1/2 | 1-3/8 | 18 | 27011218 | 280112 | 18 | 27021218 | 280212 |
| | | | | 24 | 27011224 | | 24 | 27021224 | |
| | | | | 30 | 27011230 | | 30 | 27021230 | |
| 1701T | | 3-1/4 | 1-1/4 | 12 | 27012012 | 280120 | | | |
| | | | | 18 | 27012018 | | | | |
| | | | | 24 | 27012024 | | | | |

SlideTrax curves can be made in any UHMW formulation or MD-Nylon, including:

- OF/UHMW (oil-filled UHMW)
- DS/UHMW (dry lubricant filled)
- HT/UHMW (high-temperature, 275˚F)

For a complete listing of UHMW types, see chart on page 4.

## Two-Piece Radius Curve Wearstrips

| MD-Nylon | UHMW | Wood | Chain Size | CL Radius | Width | Thickness | Rad A | Rad B |
|---|---|---|---|---|---|---|---|---|
| **Bevel** | | | | | | | | |
| 150801 | 150101 | 150401 | 880, 881 | 18 | 1 | 3/8 | 17-3/16 | 18-13/16 |
| 150802 | 150102 | 150402 | | 24 | 1 | | 23-3/16 | 24-13/16 |
| 150803 | 150103 | 150403 | | 30 | 1-1/2 | | 29-3/16 | 30-13/16 |
| 150804 | 150104 | 150404 | 882 | 24 | 1-1/2 | 5/8 | 22-55/64 | 25-9/64 |
| 150805 | 150105 | 150405 | | 30 | 1-1/2 | | 28-55/64 | 31-9/64 |
| **Rectangular** | | | | | | | | |
| 150806 | 150106 | 150406 | 880 Tab & | 18 | 1-1/2 | 3/8 | 17-1/8 | 18-7/8 |
| 150807 | 150107 | 150407 | 881 Tab | 24 | 1-1/2 | | 23-1/8 | 24-7/8 |
| 150808 | 150108 | 150408 | | 30 | 1-1/2 | | 29-1/8 | 30-7/8 |
| 150809 | 150109 | 150409 | 882 Tab | 24 | 1-1/2 | 5/8 | 22-55/64 | 25-9/64 |
| 150810 | 150110 | 150410 | | 30 | 1-1/2 | | 28-55/64 | 31-9/64 |
| 150811 | 150111 | 150411 | 1873 Tab & | | 18 | 1-1/2 | 3/4 | 17-5/16 |
| 18-11/16 | | | | | | | | |
| 150812 | 150112 | 150412 | 1874 Tab | 24 | 1-1/2 | | 23-5/16 | 24-11/16 |
| 150813 | 150113 | 150413 | | 30 | 1-1/2 | | 29-5/16 | 30-11/16 |

*All wood curves and all 30" curves are supplied in 45˚ segments.*

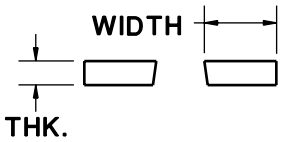


BEVEL DESIGN

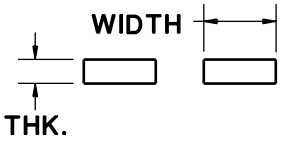


RECTANGULAR DESIGN

### Knuckle Chain Track 2" Pitch

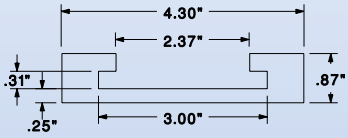


CHAIN PROFILE
"CARRY TRACK"

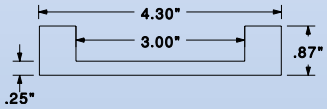


CHAIN PROFILE
"RETURN TRACK"

### Raceways for Plastic Chain

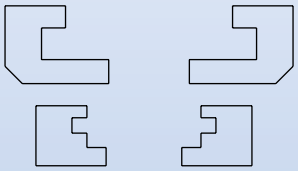

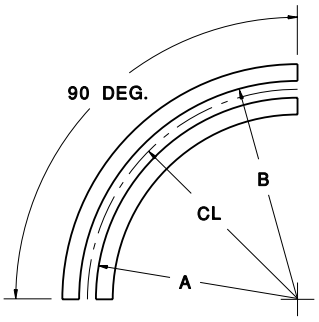

## Templates for Creating Your Custom Trax

SlideTrax can be manufactured for any chain or modular belt, for multiple strands of chain, at any degree of turn, and with any center-line radius. Typically machined from UHMW, optional materials for special applications include MD-Nylon and Acetal.

The drawings below indicate the dimensions required. When requesting a quotation, use this form to prepare your specifications. It will help us expedite a quotation for your Custom Trax.

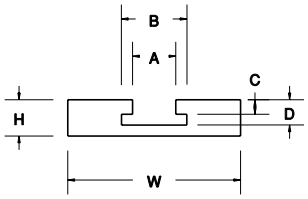


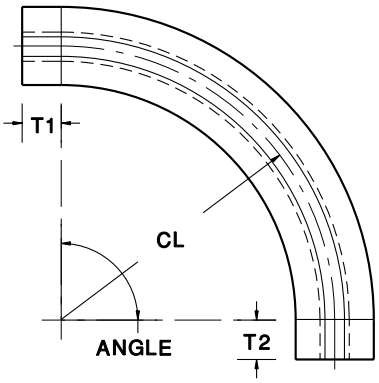


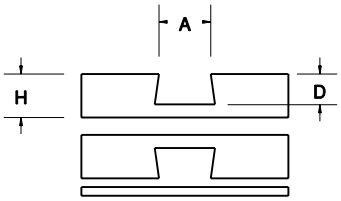


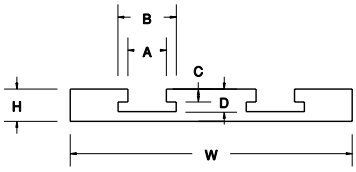


STRAIGHT TRAX

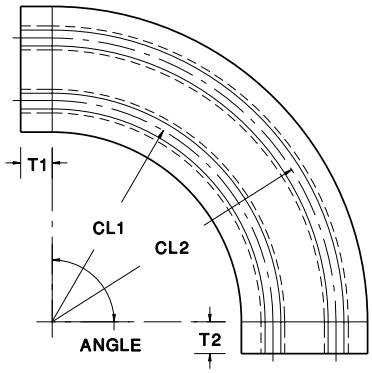


**REQUIRED DATA:**

### Curved Trax

**Material Type:** _____

**Angle:** _____

**CL Radius:** CL1. ____ CL2. ____ CL3. _____

**Width:** (W) _____

**Thickness:** (H) _____

**Tangents:** T1._____ T2._____

**Chain No. and Width:** _____

**Quantity:** _____

### Straight Trax

**Material Type:** _____

**Width:** (W) _____

**Thickness:** (H) _____

**Length:** _____

**Chain No. and Width:** _____

**Quantity:** _____

### Slideways Successes: SlideTrax

**The Challenge:** A customer was manually milling the center out of a SlideTrax curve to accommodate a turn disc.

**The Slideways Solution:** We rewrote our CNC program to customize the part while it is being machined. The purchase cost was offset significantly by the time and cost savings. Now the customer receives a part that is ready to install.

# Stainless/UHMW Guide Rails

Slideways' guide rail design provides benefits while fitting commercially available clips and brackets.

- Easier clean-ups
- Meets FDA and pharmaceutical requirements
- Used as a guide rail or belt support
- Custom profiles on request

Static dissipative and oil-filled UHMW guide rails are also available. Minimums may apply.

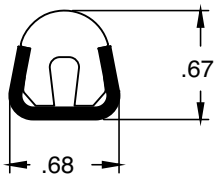


CL39503

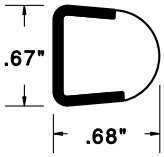


CL39461

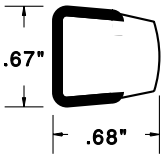


CL39465

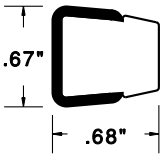


CL39469

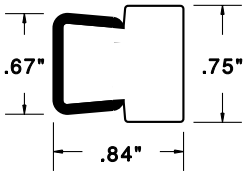


CL39473

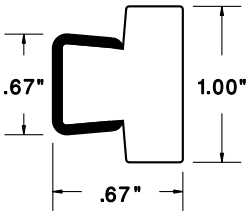


CL39491

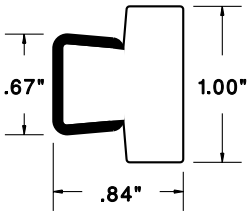


CL39475

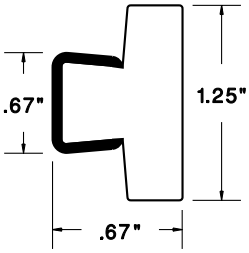


CL39492

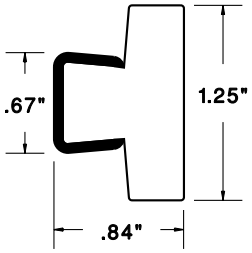


CL39477

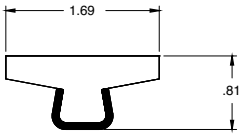


CL39479

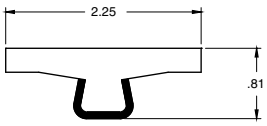


CL39501

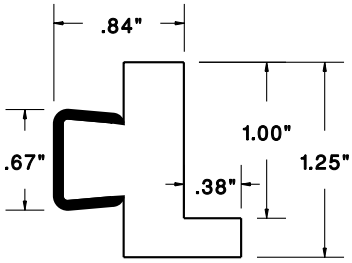


CL39497

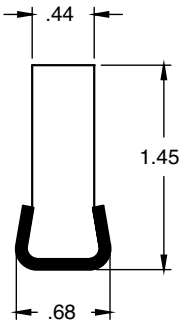


CL39505

# Aluminum and Plastic Guide Rails, Angles and Channels

Available from stock in 10 or 20 ft. lengths

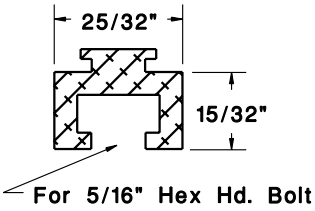


ALUMINUM: 181802

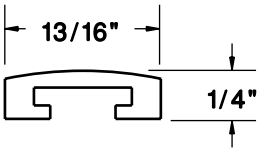


UHMW: 190102

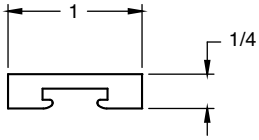


UHMW: 190143

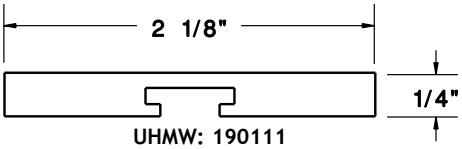


UHMW: 190111

OTHER WIDTHS & THICKNESSES AVAILABLE PER YOUR REQUIREMENTS

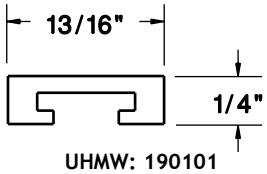


UHMW: 190101

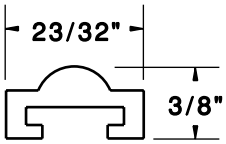


UHMW: 190110

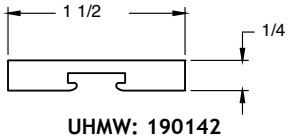


UHMW: 190142

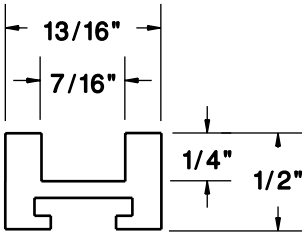


UHMW: 190109

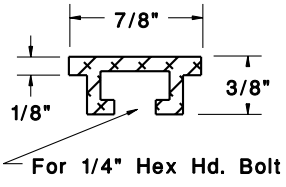


ALUMINUM: 181803

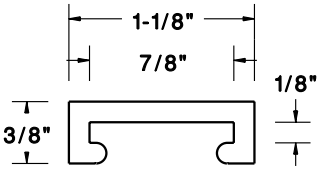


UHMW: 190103

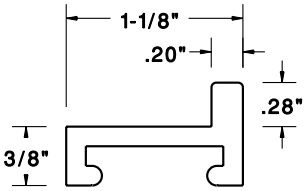


UHMW: 190115

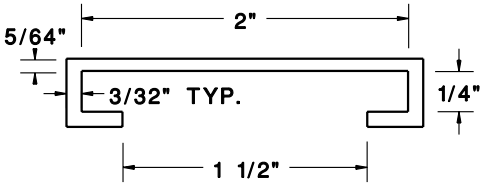


UHMW: 190104

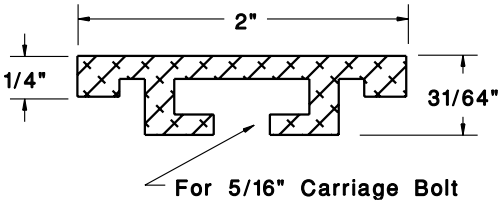


ALUMINUM: 181805

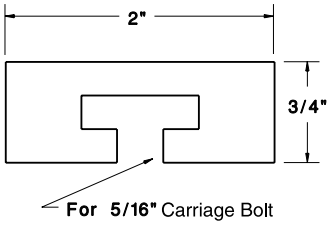


UHMW: 190112

## Guide Angles

| UHMW | A | B | C |
|---|---|---|---|
| 220101 | 1 | 1 | 1/8 |
| 220105 | 1-1/2 | 1-1/2 | 1/8 |
| 220106 | 2 | 2 | 1/8 |
| 220102 | 5/8 | 1-1/2 | 1/4 |
| 220103 | 1-1/2 | 1-1/2 | 1/4 |
| 220104 | 2 | 2 | 1/4 |
| 220107 | 3 | 3 | 1/2 |
| 220108 | 3-1/2 | 3-1/2 | 1/2 |

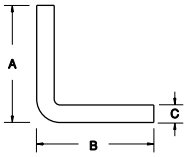


## Channel Guides

| UHMW | A | B | C | D |
|---|---|---|---|---|
| 230101 | 1/2 | 15/16 | 1/4 | 7/16 |
| 230102 | 5/8 | 1-3/16 | 3/8 | 9/16 |
| 230103 | 3/4 | 1-5/16 | 7/16 | 11/16 |
| 230104 | 3/4 | 1 | 3/8 | 1/2 |
| 230105 | 5/8 | 1-1/8 | 1/4 | 3/4 |
| 230106 | 7/8 | 1-1/2 | 1/2 | 1 |
| 230107 | 1 | 2-1/2 | 5/8 | 2 |
| 230108 | 1 | 2 | 5/8 | 1-1/2 |
| 230109 | 1 | 3 | 5/8 | 2-1/4 |
| 230110 | 1 | 3 | 5/8 | 2-1/2 |
| 230111 | 1-1/4 | 4-1/4 | 7/8 | 3-1/2 |

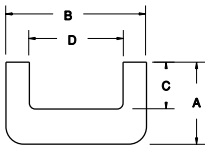


## Custom Angles and Channels

Slideways can machine custom angles and channels from any material for special applications. Use them for guiding plastic modular belts or chains. Slideways can add mounting holes or apply pressure-sensitive adhesive for easy installation.

## UHMW Rail Covers Available from stock in 10 or 20 ft. lengths

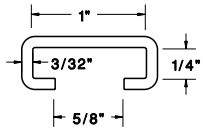


190105

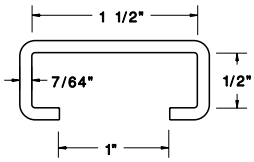


190106

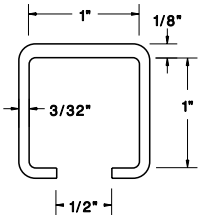


190107

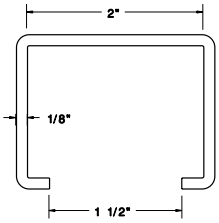


190108

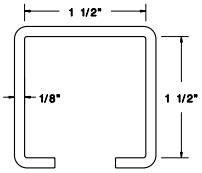


190116

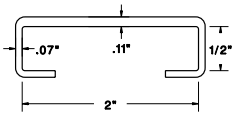


190118

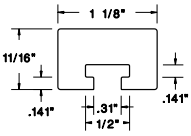


190120

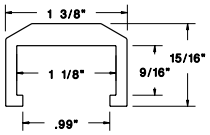


190121

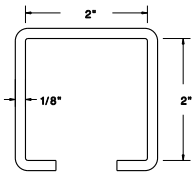


190122

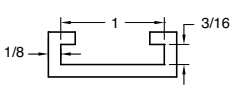


190124

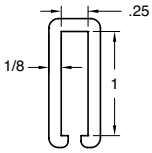


190128

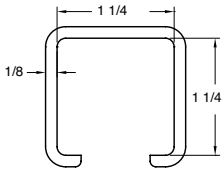


190129

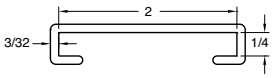


190138

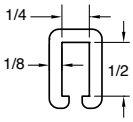


190139

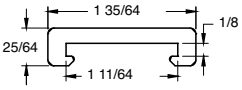


190140

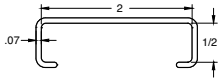


190141

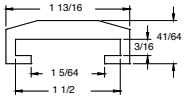


190144

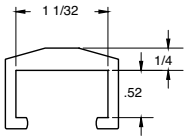


190146

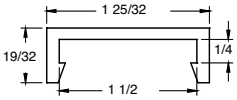


3201019

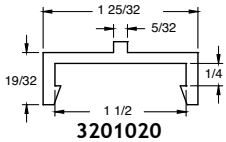


3201020

## UHMW J-LEG

### J-Leg for 1/8", 3/16" and 1/4 " Bar

| Part No. | A | B | Bar Thickness |
|---|---|---|---|
| 210121 | 1/8 | 3/4 | 1/8 |
| 210101 | 1/8 | 1 | 1/8 |
| 210102 | 1/8 | 1-1/2 | 1/8 |
| 210103 | 1/8 | 2 | 1/8 |
| 210127 | 1/8 | 3 | 1/8 |
| 210118 | 3/16 | 3/4 | 1/8 |
| 210104 | 3/16 | 1 | 1/8 |
| 210119 | 3/16 | 1-1/2 | 1/8 |
| 210105 | 3/16 | 2 | 1/8 |
| 210120 | 3/16 | 2-1/2 | 1/8 |
| 210122 | 3/16 | 2-7/8 | 1/8 |
| 210106 | 3/16 | 3 | 1/8 |
| 210107 | 1/4 | 1 | 1/8 |
| 210108 | 1/4 | 2 | 1/8 |
| 210109 | 1/4 | 3 | 1/8 |
| 210183 | 3/16 | 1 | 3/16 |
| 210184 | 3/16 | 2 | 3/16 |
| 210106-3/16 | 3/16 | 3 | 3/16 |
| 210179 | 1/4 | 3/4 | 3/16 |
| 210180 | 1/4 | 1 | 3/16 |
| 210181 | 1/4 | 2 | 3/16 |
| 210126 | 1/8 | 1-1/8 | 1/4 |

### Edge Guide J-Legs for 1/8" Thick Rail

| Part No. | B | A |
|---|---|---|
| 210161 | 1/8 | .88 |
| 210117 | 1/8 | 0.96 |
| 210130 | 3/16 | 0.96 |
| 210131 | 5/16 | 0.96 |
| 210132 | 1/8 | 1.00 |
| 210133 | 3/16 | 1.00 |

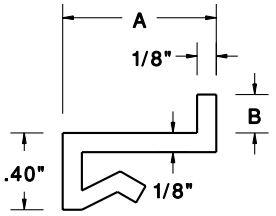


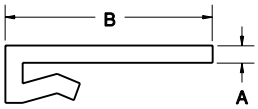


### Other Standard Shapes

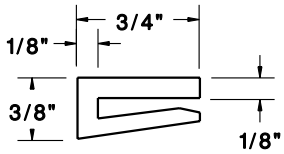


FOR 1/8" RAIL: 210116

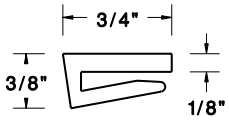


OF/UHMW: 210334

## UHMW Snap-Ons

Available from stock in 10 or 20 ft. lengths. Smaller sizes in coils.

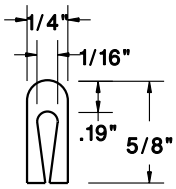


200123

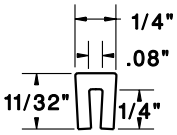


200101

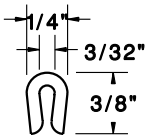


200122

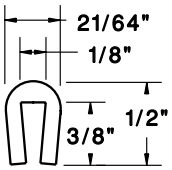


200102

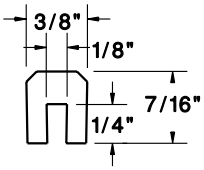


200103

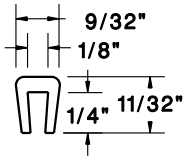


200119

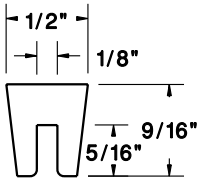


200120

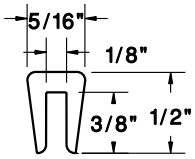


200124

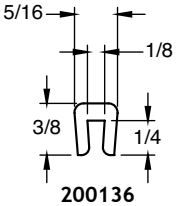


200136

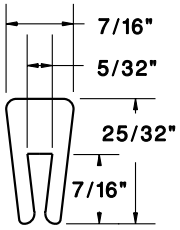


200107

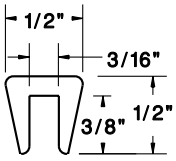


200127

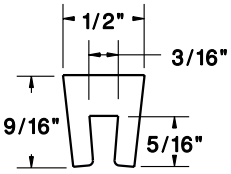


200104

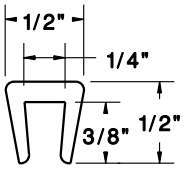


200105

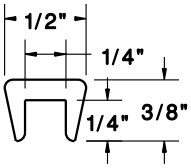


200125

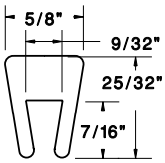


200108

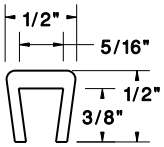


200121

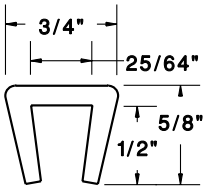


200106

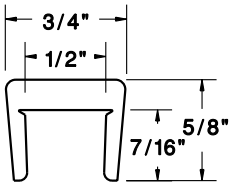


200126

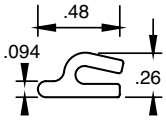


200137

## UHMW Full Round

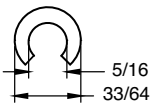


200129

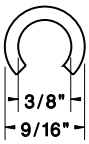


200110

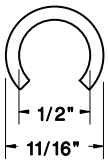


200111

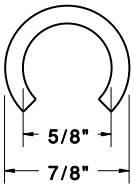


200112

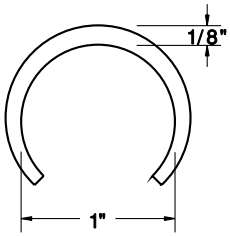


200128

## UHMW Half Round

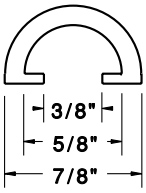


200113

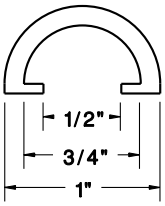


200114

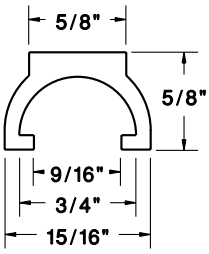


200115

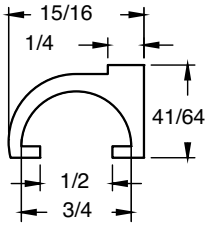


200132

## MD-Nylon Extrusions

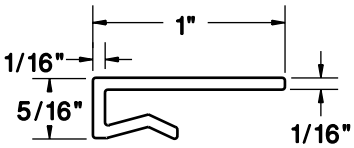


FOR 1/8" TO 3/16" RAIL
200118

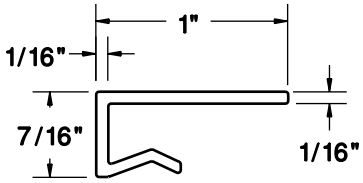


FOR 1/4" TO 5/16" RAIL
200117

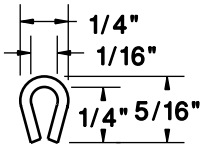


200817

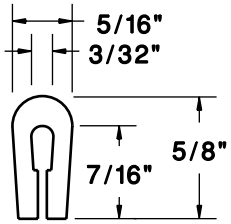


200818

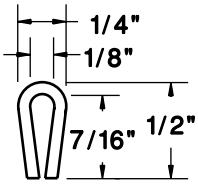


200819

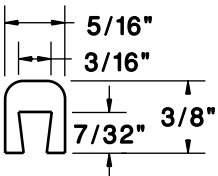


200820

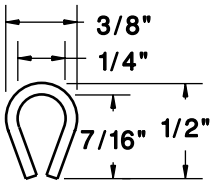


200821

## PTFE (Teflon®) High Temperature

**PTFE** profiles are available for use in applications where general purpose thermoplastic materials are unsuitable. Industries where PTFE guides and wear strips can be found include Bakeries, Food Processing, Chemical Processing and Glass Manufacturing.

The benefits of selecting PTFE are:

- Operating temperature of -350ºF to 500ºF
- Higher resistance to chemicals allows operation in harsh environments
- Very low coefficient of friction
- Excellent insulating properties for electrical applications
- Approved for direct food contact

### Full Round Snap-On

| Part No. | ID |
|---|---|
| 201010 | 3/8 |
| 201011 | 1/2 |
| 201012 | 3/4 |
| 201028 | 1 |

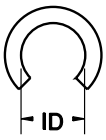


### Half Round Snap-On

| Part No. | A | B | C |
|---|---|---|---|
| 201023 | 11/16 | 1/2 | 1/4 |
| 201013 | 7/8 | 5/8 | 3/8 |
| 201014 | 1 | 3/4 | 1/2 |

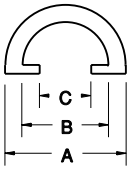


### Bar Snap-On

| Part No. | A | B | C | D |
|---|---|---|---|---|
| 201019 | 9/32 | 11/32 | 1/8 | 1/4 |
| 201005 | 1/2 | 1/2 | 1/4 | 3/8 |
| 201006 | 3/4 | 5/8 | 3/8 | 1/2 |

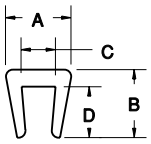


### Other Standard Shapes

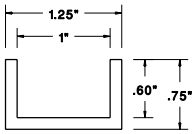


U-CHANNEL: 231021

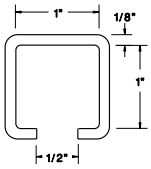


GUIDE RAIL: 191007

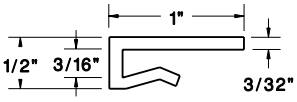


J-LEG: 211001

## Adjusting Rods

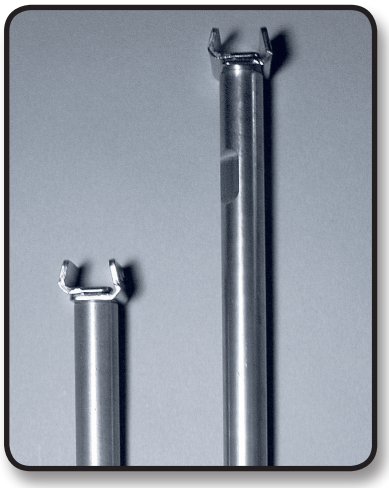

| Part No. | Shaft Length | OD | Thread |
|---|---|---|---|
| 351703-516 | 3" | 1/2" | 5/16" |
| 351703-38 | 3" | 1/2" | 3/8" |
| 351704-516 | 4" | 1/2" | 5/16" |
| 351704-38 | 4" | 1/2" | 3/8" |
| 351705-516 | 5" | 1/2" | 5/16" |
| 351705-38 | 5" | 1/2" | 3/8" |
| 351706-516 | 6" | 1/2" | 5/16" |
| 351706-38 | 6" | 1/2" | 3/8" |
| 351707-516 | 7" | 1/2" | 5/16" |
| 351707-38 | 7" | 1/2" | 3/8" |
| 351708-516 | 8" | 1/2" | 5/16" |
| 351708-38 | 8" | 1/2" | 3/8" |
| 351709-516 | 9" | 1/2" | 5/16" |
| 351709-38 | 9" | 1/2" | 3/8" |
| 351710-516 | 10" | 1/2" | 5/16" |
| 351710-38 | 10" | 1/2" | 3/8" |
| 351712-516 | 12" | 1/2" | 5/16" |
| 351712-38 | 12" | 1/2" | 3/8" |
| 351714-516 | 14" | 1/2" | 5/16" |
| 351714-38 | 14" | 1/2" | 3/8" |
| 351715-516 | 15" | 1/2" | 5/16" |
| 351715-38 | 15" | 1/2" | 3/8" |
| 351718-516 | 18" | 1/2" | 5/16" |
| 351718-38 | 18" | 1/2" | 3/8" |

| Part No. | Shaft Length | OD | Thread |
|---|---|---|---|
| 361703-516 | 3" | 5/8" | 5/16" |
| 361703-38 | 3" | 5/8" | 3/8" |
| 361704-516 | 4" | 5/8" | 5/16" |
| 361704-38 | 4" | 5/8" | 3/8" |
| 361705-516 | 5" | 5/8" | 5/16" |
| 361705-38 | 5" | 5/8" | 3/8" |
| 361706-516 | 6" | 5/8" | 5/16" |
| 361706-38 | 6" | 5/8" | 3/8" |
| 361707-516 | 7" | 5/8" | 5/16" |
| 361707-38 | 7" | 5/8" | 3/8" |
| 361708-516 | 8" | 5/8" | 5/16" |
| 361708-38 | 8" | 5/8" | 3/8" |
| 361709-516 | 9" | 5/8" | 5/16" |
| 361709-38 | 9" | 5/8" | 3/8" |
| 361710-516 | 10" | 5/8" | 5/16" |
| 361710-38 | 10" | 5/8" | 3/8" |
| 361712-516 | 12" | 5/8" | 5/16" |
| 361712-38 | 12" | 5/8" | 3/8" |
| 361714-516 | 14" | 5/8" | 5/16" |
| 361714-38 | 14" | 5/8" | 3/8" |
| 361715-516 | 15" | 5/8" | 5/16" |
| 361715-38 | 15" | 5/8" | 3/8" |
| 361718-516 | 18" | 5/8" | 5/16" |
| 361718-38 | 18" | 5/8" | 3/8" |

## SlideRails

Heavy-duty SlideRails provide a low-friction surface ideal for roller combiner and accumulation applications. High performing acetal balls are low maintainence and have a long life. SlideRail channels are made from 10-gauge stainless and galvanized steel. The 304 stainless steel pins in each SlideRail provide superior service in harsh environments, and the pin rails are glass-filled nylon. Two-inch key slots are designed for 3/8" carriage bolts and are 12" on center.

### 2" SlideRails

| Stainless Steel | Galvanized Steel | Length | Height |
|---|---|---|---|
| SSR-2-02 | GSR-2-02 | 2' | 2" |
| SSR-2-03 | GSR-2-03 | 3' | 2" |
| SSR-2-04 | GSR-2-04 | 4' | 2" |
| SSR-2-06 | GSR-2-06 | 6' | 2" |
| SSR-2-07 | GSR-2-07 | 7' | 2" |
| SSR-2-08 | GSR-2-08 | 8' | 2" |
| SSR-2-09 | GSR-2-09 | 9' | 2" |
| SSR-2-10 | GSR-2-10 | 10' | 2" |

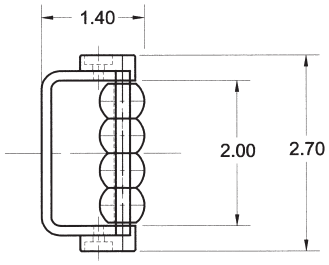


### 3" SlideRails

| Stainless Steel | Galvanized Steel | Length | Height |
|---|---|---|---|
| SSR-3-02 | GSR-3-02 | 2' | 3" |
| SSR-3-03 | GSR-3-03 | 3' | 3" |
| SSR-3-04 | GSR-3-04 | 4' | 3" |
| SSR-3-06 | GSR-3-06 | 6' | 3" |
| SSR-3-07 | GSR-3-07 | 7' | 3" |
| SSR-3-08 | GSR-3-08 | 8' | 3" |
| SSR-3-09 | GSR-3-09 | 9' | 3" |
| SSR-3-10 | GSR-3-10 | 10' | 3" |

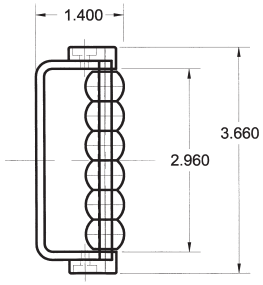

## Hanger Bearings

**Slideways** manufactures Hanger Bearings in a variety of materials so you can be sure of using the best performing part for your application. The most common styles are shown below. Custom Hanger Bearings can be fabricated in other sizes and materials based on your prints or supplied samples.

**Slideways** wood and plastic hanger bearings provide great service life for screw conveyors moving abrasive materials such as grain or wood fibers.

Hangers position the bearings to provide the correct support for the screw shaft.

### For Hanger Styles: 220, 226, 20B, 26B, 28B, 326

| Wood | UHMW | Nylon | MD-Nylon | Shaft Dia. | A | B | Length |
|---|---|---|---|---|---|---|---|
| 100401 | 100101 | 100701 | 100801 | 1 | 1-1/2 | 1-1/16 | 1-7/16 |
| 100402 | 100102 | 100702 | 100802 | 1-1/2 | 2-1/8 | 1-9/16 | 1-15/16 |
| 100403 | 100103 | 100703 | 100803 | 2 | 2-3/4 | 1-9/16 | 1-15/16 |
| 100404 | 100104 | 100704 | 100804 | 2-7/16 | 3-1/4 | 2-3/8 | 2-15/16 |
| 100405 | 100105 | 100705 | 100805 | 3 | 4 | 2-3/8 | 2-15/16 |
| 100406 | 100106 | 100706 | 100806 | 3-7/16 | 4-3/4 | 3-1/8 | 3-15/16 |

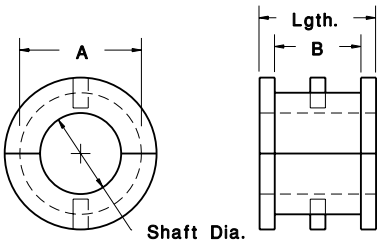


### For Hanger Styles: 17, 18B, 19B, 40

| Wood | UHMW | Nylon | MD-Nylon | Shaft Dia. | A | Length |
|---|---|---|---|---|---|---|
| 100407 | 100107 | 100707 | 100807 | 1 | 1-1/2 | 1-7/16 |
| 100408 | 100108 | 100708 | 100808 | 1-1/2 (6") | 2 | 1-15/16 |
| 100409 | 100109 | 100709 | 100809 | 1-1/2 (9") | 2-3/8 | 1-15/16 |
| 100410 | 100110 | 100710 | 100810 | 2 | 3 | 1-15/16 |
| 100411 | 100111 | 100711 | 100811 | 2-7/16 | 3-11/16 | 2-15/16 |
| 100412 | 100112 | 100712 | 100812 | 3 | 4-1/8 | 2-15/16 |
| 100413 | 100113 | 100713 | 100813 | 3-7/16 | 4-11/16 | 3-15/16 |

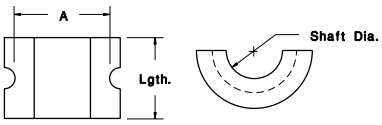


### For Hanger Styles: 216, 230, 16B, 216F, 316

| Wood | UHMW | Nylon | MD-Nylon | Shaft Dia. | A | B | C | Length |
|---|---|---|---|---|---|---|---|---|
| 100414 | 100114 | 100714 | 100814 | 1 | 1-9/16 | 1-1/8 | 1 | 1-7/16 |
| 100415 | 100115 | 100715 | 100815 | 1-1/2 | 2-1/4 | 1-3/8 | 1-3/8 | 1-15/16 |
| 100416 | 100116 | 100716 | 100816 | 2 | 3-1/4 | 1-5/8 | 1-5/8 | 1-15/16 |
| 100417 | 100117 | 100717 | 100817 | 2-7/16 | 4 | 1-5/8 | 2-1/8 | 2-15/16 |
| 100418 | 100118 | 100718 | 100818 | 3 | 4-1/2 | 2-1/8 | 2-1/4 | 2-15/16 |
| 100419 | 100119 | 100719 | 100819 | 3-7/16 | 4-7/8 | 2-11/16 | 2-7/16 | 3-15/16 |

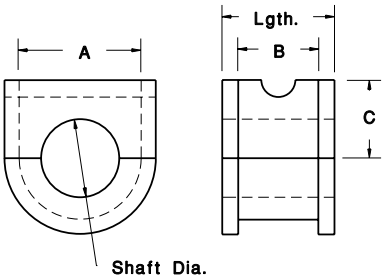

## New! Slider Beds from Slideways

Slideways introduces low friction UHMW-PE Guides specifically designed for **covered and profiled timing belt** conveying applications. Belt guides made of metal cause extensive belt abrasive wear. By choosing a Slideways belt guide you reduce wear, reduce energy costs and static friction. Delivery in 2 weeks!

### Slider beds for Self-tracking Belts

Slider beds with V-grooves are used in combination with self-tracking (G6, G10, G13) belts
Please specify "V" groove size for type K and KC

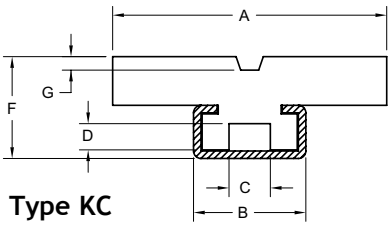


Type KC

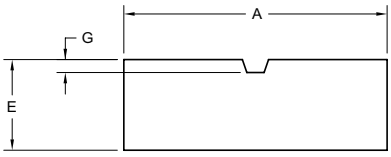


Type K

| Part Number Type KC | Type K | A mm | B mm | C mm | D mm | E mm | F mm | G mm | Recommended for Self Tracking Belts | | |
|---|---|---|---|---|---|---|---|---|---|---|---|
| 1725-KC 32 X 4 | 1725-K 32 X 4 | 45 | 38 | 11 | 7 | 22 | 23.5 | 4 | 32 ATK 5 | 32 TK 5 | |
| 1725-KC 50 X 4 | 1725-K 50 X 4 | 68 | 38 | 14 | 9 | 32 | 34.5 | 4 | 50 ATK 5 | 50 TK 5 | |
| 1725-KC 32 X 4.5 | 1725-K 32 X 4.5 | 45 | 38 | 11 | 7 | 22 | 23.5 | 4.5 | 32 ATK 10 | 32 TK 10 | |
| 1725-KC 50 X 4.5 | 1725-K 50 X 4.5 | 68 | 38 | 14 | 9 | 32 | 34.5 | 4.5 | 50 ATK 10 | 50 TK 10 | 50.8 HK |
| 1725-KC 75 X 4.5 | 1725-K 75 X 4.5 | 93 | 38 | 14 | 9 | 32 | 34.5 | 4.5 | 75 ATK 10 | 75 TK 10 | 76.7 HK |
| 1725-KC 100 X 4.5 | 1725-K 100 X 4.5 | 118 | 38 | 14 | 9 | 32 | 34.5 | 4.5 | 100 ATK 10 | 100 TK 10 | 101.6 HK |
| 1725-KC 50 X 2 | 1725-K 50 X 2 | 68 | 38 | 14 | 9 | 32 | 34.5 | 2 | 50 ATK 20 | 50 TK 20 | |
| 1725-KC 75 2 | 1725-K 75 X 2 | 93 | 38 | 14 | 9 | 32 | 34.5 | 2 | 75 ATK 20 | 75 TK 20 | |
| 1725-KC 100 X 2 | 1725-K 100 X 2 | 118 | 38 | 14 | 9 | 32 | 34.5 | 2 | 100 ATK 20 | 100 TK 20 | |

### Slider Beds Without Edge Guiding

Slider beds without edge guiding are recommeded for all conveying applications with minimal side loads

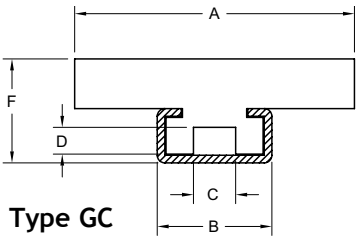


Type GC

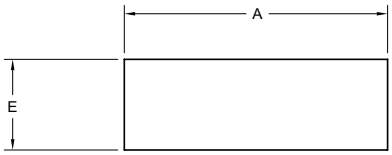


Type G

| Part Number Type GC | Type G | A mm | B mm | C mm | D mm | E mm | F mm | Recommended for Belt Widths |
|---|---|---|---|---|---|---|---|---|
| 1725-GC 32 | 1725-G 32 | 45 | 38 | 11 | 7 | 22 | 23.5 | 32 |
| 1725-GC 50 | 1725-G 50 | 68 | 38 | 14 | 9 | 32 | 34.5 | 50/50.8 |
| 1725-GC 75 | 1725-G 75 | 93 | 38 | 14 | 9 | 32 | 34.5 | 75/76.2 |
| 1725-GC 100 | 1725-G 100 | 118 | 38 | 14 | 9 | 32 | 34.5 | 100/101.6 |

## New! Slider Beds from Slideways

Slideways introduces low friction UHMW-PE Guides specifically designed for **covered and profiled timing belt** conveying applications. Belt guides made of metal cause extensive belt abrasive wear. By choosing a Slideways belt guide you reduce wear, reduce energy costs and static friction. Delivery in 2 weeks!

**Slider Beds with Edge Guiding:**

Slider beds with edge guides are recommended for applications where the timing belt conveyor must be guided due to side thrust.

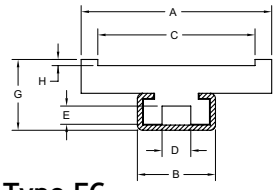


Type FC

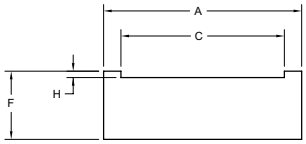


Type F

| Part Number Type FC | Type F | A mm | B mm | C mm | D mm | E mm | F mm | G mm | H mm | Recommended for Self Tracking Belts | |
|---|---|---|---|---|---|---|---|---|---|---|---|
| 1725-FC 32 X 2 | 1725-F 32 X 2 | 45 | 38 | 33 | 11 | 7 | 22 | 23.5 | 2 | 32 AT5 | 32 T5 |
| 1725-FC 50 X 2 | 1725-F 50 X 2 | 68 | 38 | 51 | 14 | 9 | 32 | 34.5 | 2 | 50 AT5 | 50 T5 |
| 1725-FC 75 X 2 | 1725-F 75 X 2 | 93 | 38 | 78 | 14 | 9 | 32 | 34.5 | 2 | 75 AT5 | 75 T5 |
| 1725-FC 100 X 2 | 1725-F 100 X 2 | 118 | 38 | 101 | 14 | 9 | 32 | 34.5 | 2 | 100 AT5 | 100 T5 |
| 1725-FC 51 X 3 | 1725-F 51 X 3 | 68 | 38 | 52 | 14 | 9 | 32 | 34.5 | 3 | | L200 |
| 1725-FC 76 X 3 | 1725-F 76 X 3 | 93 | 38 | 77 | 14 | 9 | 32 | 34.5 | 3 | | L300 |
| 1725-FC 101 X 3 | 1725-F 101 X 3 | 118 | 38 | 103 | 14 | 9 | 32 | 34.5 | 3 | | L400 |
| 1725-FC 51 X 3.5 | 1725-F 51 X 3.5 | 68 | 38 | 52 | 14 | 9 | 32 | 34.5 | 3.5 | | H200 |
| 1725-FC 76 X 3.5 | 1725-F 76 X 3.5 | 93 | 38 | 77 | 14 | 9 | 32 | 34.5 | 3.5 | | H300 |
| 1725-FC 101 X 3.5 | 1725-F 101 X 3.5 | 118 | 38 | 103 | 14 | 9 | 32 | 34.5 | 3.5 | | H400 |
| 1725-FC 32 X 4 | 1725-F 32 X 4 | 45 | 38 | 33 | 11 | 7 | 22 | 23.5 | 4 | 32AT10 | 32T10 |
| 1725-FC 50 X 4 | 1725-F 50 X 4 | 68 | 38 | 51 | 14 | 9 | 32 | 34.5 | 4 | 50AT10 | 50T10 |
| 1725-FC 75 X 4 | 1724-F 75 X 4 | 93 | 38 | 76 | 14 | 9 | 32 | 34.5 | 4 | 75AT10 | 75T10 |
| 1725-FC 100 X4 | 1725-F 100 X 4 | 118 | 38 | 101 | 14 | 9 | 32 | 34.5 | 4 | 100AT10 | 100T10 |
| 1725-FC 50 X 7 | 1725-F 50 X 7 | 68 | 38 | 51 | 14 | 9 | 32 | 34.5 | 7 | 50AT20 | 50T20 |
| 1725-FC 75 X 7 | 1725-F 75 X 7 | 93 | 38 | 76 | 14 | 9 | 32 | 34.5 | 7 | 75AT20 | 75T20 |

**Ordering Nomenclature**

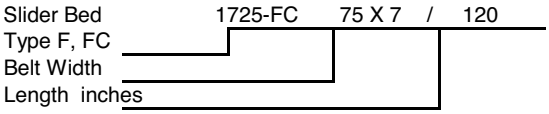


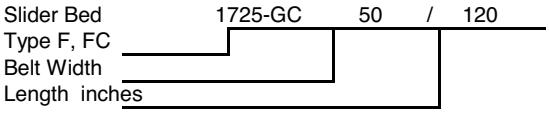


**Available Configurations**

Natural UHMW-PE, Oil Filled UHMW-PE, Static Dissipative UHMW- PE, Repro UHMW-PE
BluLub® UHMW-PE is available for High Performance / FDA applications
**Standard Length 120"**

## More UHMW Grades

| XX | Grade | Attribute* |
|---|---|---|
| 02 | Black Repro | Lower cost |
| 03 | Oil-Filled UHMW | Higher speed |
| 25 | Green Repro | Matches European guides |
| 23 | Static-Dissipative | Conductive |
| 30 | HT | Operates to 275°F |

All of our Roller Chain Guides and Belt Guides are available in several grades of UHMW. To determine the correct part number, substitute the appropriate UHMW grade number wherever you see "XX" in the tables below.

*More details can be found in the UHMW Materials section on page 4.

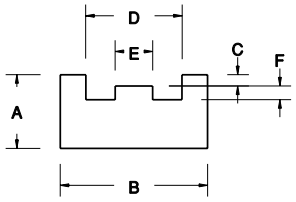


### Type TS

| UHMW | More UHMW Grades | ANSI Chain No. | A | B | C | D | E | F |
|---|---|---|---|---|---|---|---|---|
| 1601111 | 16XX111 | 35 | 0.39 | 0.79 | .03 | 0.43 | .15 | .09 |
| 1601112 | 16XX112 | 40 | 0.39 | 0.98 | .07 | 0.61 | .25 | .09 |
| 1601113 | 16XX113 | 50 | 0.59 | 1.18 | .09 | 0.77 | .30 | .11 |
| 1601114 | 16XX114 | 60 | 0.59 | 1.38 | .11 | 0.96 | .40 | .14 |
| 1601115 | 16XX115 | 80 | 0.79 | 1.57 | .14 | 1.23 | .50 | .19 |
| 1601116 | 16XX116 | 100 | 0.98 | 1.97 | .17 | 1.51 | .59 | .25 |
| 1601117 | 16XX117 | 120 | 1.18 | 2.36 | .20 | 1.91 | .80 | .31 |

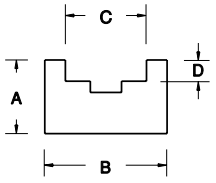


### Type U

| UHMW | More UHMW Grades | ANSI Chain No. | A | B | C | D |
|---|---|---|---|---|---|---|
| 1601091 | 16XX091 | 35 | .59 | 0.79 | 0.39 | .15 |
| 1601092 | 16XX092 | 40 | .59 | 0.79 | 0.51 | .18 |
| 1601093 | 16XX093 | 50 | .71 | 1.10 | 0.65 | .24 |
| 1601094 | 16XX094 | 60 | .71 | 1.10 | 0.78 | .28 |
| 1601095 | 16XX095 | 80 | .79 | 1.50 | 1.04 | .30 |
| 1601096 | 16XX096 | 100 | .98 | 1.57 | 1.30 | .33 |
| 1601097 | 16XX097 | 120 | .98 | 2.17 | 1.57 | .39 |

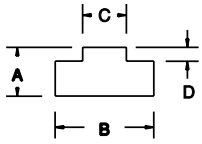


### Type T

| UHMW | More UHMW Grades | ANSI Chain No. | A | B | C | D |
|---|---|---|---|---|---|---|
| 1601121 | 16XX121 | 35 | 0.59 | 0.78 | .17 | .10 |
| 1601122 | 16XX122 | 40 | 0.59 | 0.78 | .29 | .10 |
| 1601123 | 16XX123 | 50 | 0.59 | 0.78 | .35 | .12 |
| 1601124 | 16XX124 | 60 | 0.59 | 1.10 | .47 | .15 |
| 1601125 | 16XX125 | 80 | 0.71 | 1.34 | .60 | .18 |
| 1601126 | 16XX126 | 100 | 1.00 | 1.61 | .72 | .26 |
| 1601127 | 16XX127 | 120 | 1.25 | 2.01 | .96 | .31 |

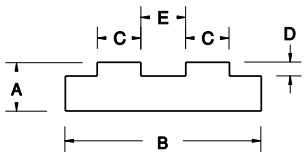


### Type TD

| UHMW | More UHMW Grades | ANSI Chain No. | A | B | C | D | E |
|---|---|---|---|---|---|---|---|
| 1601131 | 16XX131 | 35-2 | .59 | 0.78 | .17 | .10 | .23 |

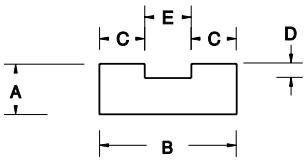


### Type TD

| UHMW | More UHMW Grades | ANSI Chain No. | A | B | C | D | E |
|---|---|---|---|---|---|---|---|
| 1601132 | 16XX132 | 40-2 | .59 | 0.85 | .29 | .10 | .27 |
| 1601133 | 16XX133 | 50-2 | .59 | 1.07 | .35 | .12 | .37 |
| 1601134 | 16XX134 | 60-2 | .59 | 1.34 | .47 | .15 | .40 |
| 1601135 | 16XX135 | 80-2 | .71 | 1.75 | .60 | .18 | .55 |
| 1601136 | 16XX136 | 100-2 | .79 | 2.09 | .70 | .25 | .69 |
| 1601137 | 16XX137 | 120-2 | .79 | 2.72 | .93 | .31 | .86 |

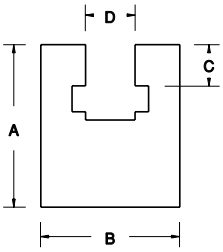


### Type K

| UHMW | More UHMW Grades | ANSI Chain No. | A | B | C | D |
|---|---|---|---|---|---|---|
| 1601101 | 16XX101 | 35 | 0.88 | 0.78 | .17 | .22 |
| 1601102 | 16XX102 | 40 | 1.05 | 1.10 | .29 | .33 |
| 1601103 | 16XX103 | 50 | 1.43 | 1.50 | .35 | .42 |
| 1601104 | 16XX104 | 60 | 1.85 | 1.50 | .47 | .49 |
| 1601105 | 16XX105 | 80 | 1.77 | 1.57 | .60 | .66 |
| 1601106 | 16XX106 | 100 | 1.97 | 1.97 | .70 | .79 |
| 1601107 | 16XX107 | 120 | 2.36 | 2.36 | .93 | .92 |

## More UHMW Grades

| XX | Grade | Attribute* |
|---|---|---|
| 02 | Black Repro | Lower cost |
| 03 | Oil-Filled UHMW | Higher speed |
| 25 | Green Repro | Matches European guides |
| 23 | Static-Dissipative | Conductive |
| 30 | HT | Operates to 275°F |

All of our Roller Chain Guides and Belt Guides are available in several grades of UHMW. To determine the correct part number, substitute the appropriate UHMW grade number wherever you see "XX" in the tables below.

*More details can be found in the UHMW Materials section on page 4.

Stainless and Galvanized Mounting Channel are sold separately. (See page 26)

### Type CU—Mounted

| UHMW | More UHMW Grades | ANSI Chain No. | A | B | C | D | E | Channel Size |
|---|---|---|---|---|---|---|---|---|
| 1601061 | 16XX061 | 35 | .59 | 0.78 | 0.39 | .15 | 0.79 | C3 |
| 1601062 | 16XX062 | 40 | .59 | 0.78 | 0.51 | .18 | 0.79 | C3 |
| 1601063 | 16XX063 | 50 | .71 | 1.10 | 0.67 | .24 | 0.95 | C5 |
| 1601064 | 16XX064 | 60 | .71 | 1.10 | 0.78 | .28 | 0.95 | C5 |
| 1601065 | 16XX065 | 80 | .79 | 1.50 | 1.04 | .30 | 1.16 | C9 |

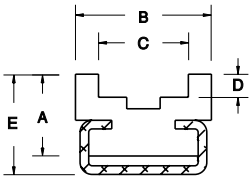


### Type CT—Mounted

| UHMW | More UHMW Grades | ANSI Chain No. | A | B | C | D | E | Channel Size |
|---|---|---|---|---|---|---|---|---|
| 1601044 | 16XX044 | 40 | .59 | 0.78 | .29 | .10 | .79 | C3 |
| 1601045 | 16XX045 | 50 | .59 | 0.78 | .35 | .12 | .79 | C3 |
| 1601046 | 16XX046 | 60 | .59 | 1.10 | .46 | .15 | .79 | C5 |
| 1601047 | 16XX047 | 80 | .71 | 1.34 | .60 | .18 | .95 | C5 |

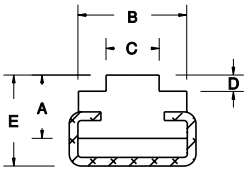


### Type CTD—Mounted

| UHMW | More UHMW Grades | ANSI Chain No. | A | B | C | D | E | Channel Size |
|---|---|---|---|---|---|---|---|---|
| 1601048 | 16XX048 | 40-2 | .59 | 0.85 | .29 | .10 | 0.79 | C3 |
| 1601049 | 16XX049 | 50-2 | .59 | 1.06 | .35 | .12 | 0.79 | C5 |
| 1601050 | 16XX050 | 60-2 | .59 | 1.34 | .47 | .15 | 0.79 | C5 |
| 1601051 | 16XX051 | 80-2 | .71 | 1.75 | .60 | .18 | 0.95 | C9 |
| 1601099 | 16XX099 | 100-2 | .87 | 2.09 | .70 | .25 | 1.18 | C9 |

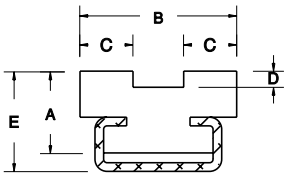


### Type CTS—Mounted

| UHMW | More UHMW Grades | ANSI Chain No. | A | B | C | D | E | F | Channel Size |
|---|---|---|---|---|---|---|---|---|---|
| 1601071 | 16XX071 | 35 | 0.78 | .03 | 0.43 | .15 | .09 | 0.67 | C3 |
| 1601072 | 16XX072 | 40 | 0.98 | .07 | 0.61 | .25 | .09 | 0.71 | C3 |
| 1601073 | 16XX073 | 50 | 1.18 | .09 | 0.77 | .30 | .11 | 0.87 | C5 |
| 1601074 | 16XX074 | 60 | 1.38 | .11 | 0.96 | .40 | .14 | 0.98 | C5 |
| 1601075 | 16XX075 | 80 | 1.57 | .14 | 1.23 | .50 | .19 | 1.26 | C9 |
| 1601076 | 16XX076 | 100 | 1.97 | .17 | 1.51 | .59 | .25 | 1.47 | C9 |

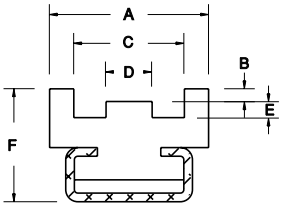


### Type CKG—Mounted

| UHMW | Other Materials | ANSI Chain No. | A | B | C | D | Channel Size |
|---|---|---|---|---|---|---|---|
| 1601052 | 16XX052 | 35 | .22 | .17 | 1.18 | 0.94 | C10 |
| 1601053 | 16XX053 | 40 | .33 | .29 | 1.18 | 0.94 | C10 |
| 1601054 | 16XX054 | 50 | .42 | .35 | 1.18 | 0.94 | C10 |
| 1601055 | 16XX055 | 60 | .49 | .47 | 1.77 | 1.58 | C11 |
| 1601056 | 16XX056 | 80 | .65 | .60 | 1.77 | 1.58 | C11 |

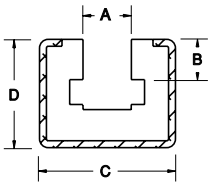


### Type CK—Mounted

| UHMW | Other Materials | ANSI Chain No. | A | B | C | D | E | Channel Size |
|---|---|---|---|---|---|---|---|---|
| 1601081 | 16XX081 | 35 | 0.80 | 0.78 | .17 | .22 | 0.94 | C3 |
| 1601082 | 16XX082 | 40 | 1.01 | 1.10 | .29 | .33 | 1.13 | C5 |
| 1601083 | 16XX083 | 50 | 1.24 | 1.50 | .35 | .42 | 1.53 | C9 |
| 1601084 | 16XX084 | 60 | 1.66 | 1.50 | .47 | .49 | 1.95 | C9 |
| 1601085 | 16XX085 | 80 | 2.26 | 1.50 | .60 | .65 | 2.55 | C9 |

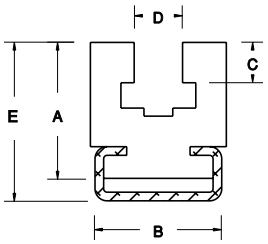

## More UHMW Grades

| XX | Grade | Attribute* |
|---|---|---|
| 02 | Black Repro | Lower cost |
| 03 | Oil-Filled UHMW | Higher speed |
| 25 | Green Repro | Matches European guides |
| 23 | Static-Dissipative | Conductive |
| 30 | HT | Operates to 275°F |

All of our Roller Chain Guides and Belt Guides are available in several grades of UHMW. To determine the correct part number, substitute the appropriate UHMW grade number wherever you see "XX" in the tables below.

*More details can be found in the UHMW Materials section on page 4.

## Channel Style

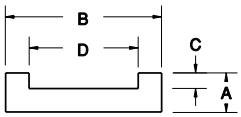


| UHMW | More UHMW Grades | ANSI Chain No. | A | B | C | D |
|---|---|---|---|---|---|---|
| 1601001 | 16XX001 | 2040 | .31 | 1.25 | .13 | 0.88 |
| 1601002 | 16XX002 | 2050 | .38 | 1.25 | .16 | 1.00 |
| 1601003 | 16XX003 | 2060 | .38 | 1.50 | .19 | 1.25 |
| 1601004 | 16XX004 | 2080 | .50 | 2.00 | .25 | 1.56 |
| 1601005 | 16XX005 | 2100 | .63 | 2.25 | .31 | 1.88 |
| 1601006 | 16XX006 | 2120 | .63 | 2.75 | .38 | 2.25 |

## Raised Track

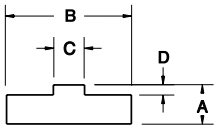


| UHMW | More UHMW Grades | ANSI Chain No. | A | B | C | D |
|---|---|---|---|---|---|---|
| 1601025 | 16XX025 | 2040 | .31 | 1.00 | .25 | .08 |
| 1601026 | 16XX026 | 2050 | .31 | 1.25 | .31 | .10 |
| 1601027 | 16XX027 | 2060 | .31 | 1.25 | .44 | .12 |
| 1601028 | 16XX028 | 2080 | .38 | 1.50 | .56 | .13 |
| 1601029 | 16XX029 | 2100 | .50 | 2.00 | .69 | .21 |
| 1601030 | 16XX030 | 2120 | .50 | 2.25 | .94 | .26 |

## Channel with Raised Track

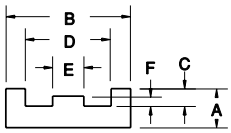


| UHMW | More UHMW Grades | ANSI Chain No. | A | B | C | D | E | F |
|---|---|---|---|---|---|---|---|---|
| 1601037 | 16XX037 | 2040 | .31 | 1.00 | .14 | 0.69 | .25 | .08 |
| 1601038 | 16XX038 | 2050 | .38 | 1.25 | .19 | 0.81 | .31 | .10 |
| 1601039 | 16XX039 | 2060 | .50 | 1.50 | .21 | 1.13 | .44 | .12 |
| 1601040 | 16XX040 | 2080 | .50 | 2.00 | .25 | 1.44 | .56 | .13 |

## Mounting Channel

**C3**
Galv. 181606
SS 181706

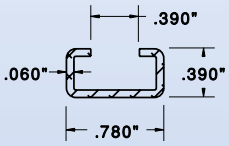


**C5**
Galv. 181607
SS 181707

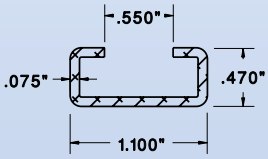


**C9**
Galv. 181608
SS 181708

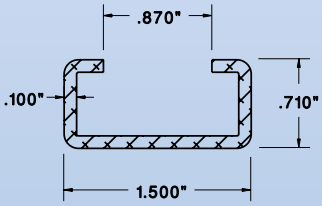


**C10**
Galv. 181609
SS 181709

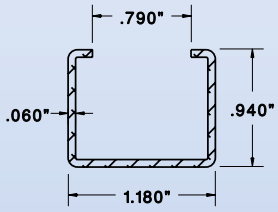


**C11**
Galv. 181610
SS 181710

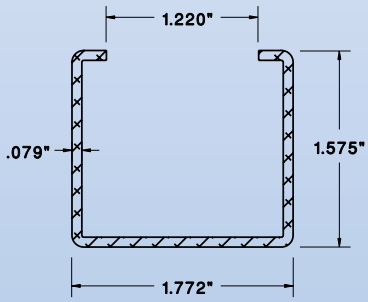

## Custom Chain Guides

Slideways manufactures chain guides for all roller chains including metric and multi-strand.

**Materials of choice include:**

- Oil-filled UHMW for high-speed applications
- Nyloil for heavy-duty applications
- Glass-filled Teflon for high temp or chemical resistance
- MD-Nylon for high load capacity
- Static-dissipative UHMW for electronics applications

There are many advantages to using custom-machined guides over extruded guides:

### Machined Profiles

Usually no tooling
Short lead time
- 2 weeks or less

Tight Tolerances
- Machine to ±.005"

Design flexibility
- Designs can change quickly
- Try new material

No minimum runs

versus

### Extrusion

Tooling required
Long lead time
- 5-8 weeks for tooling

Loose tolerances
- Cooling rates cause warping

No design flexibility
- New tool required for revisions
- Minimum run required

Large minimum run

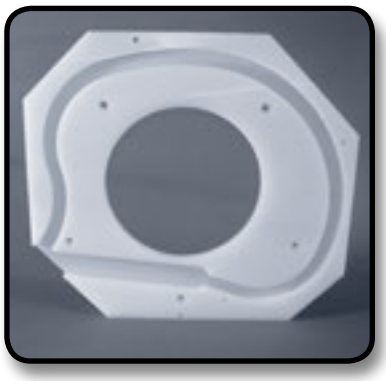

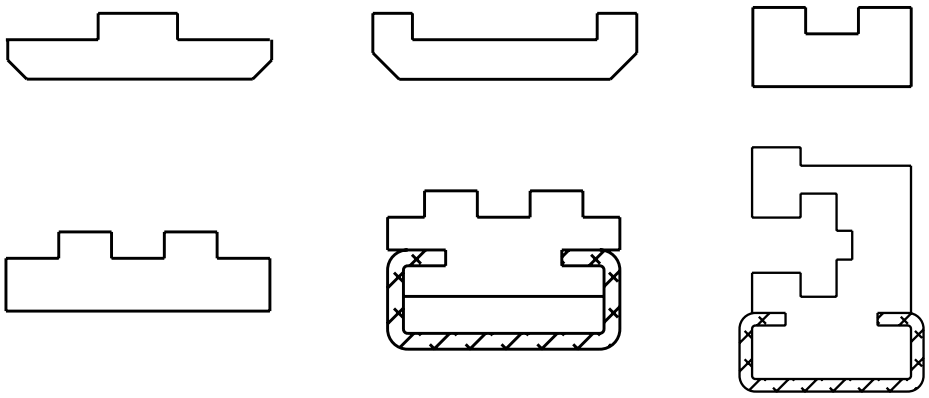

**ROLLER CHAIN GUIDES FOR: #25, #35, #40, #40-2, #50, #50-2, #60, #60-2, #80, #80-2, #100, #120 AND METRIC SIZES**

## More UHMW Grades

| XX | Grade | Attribute* |
|---|---|---|
| 02 | Black Repro | Lower cost |
| 03 | Oil-Filled UHMW | Higher speed |
| 25 | Green Repro | Matches European guides |
| 23 | Static-Dissipative | Conductive |
| 30 | HT | Operates to 275°F |

All of our Roller Chain Guides and Belt Guides are available in several grades of UHMW. To determine the correct part number, substitute the appropriate UHMW grade number wherever you see "XX" in the tables below.

*More details can be found in the UHMW Materials section on page 4.

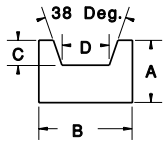


### V-Belt Guides—Plain

| UHMW | More UHMW Grades | Belt Type | A | B | C | D |
|---|---|---|---|---|---|---|
| 170101 | 17XX01 | O or 3L | 0.38 | 0.75 | 0.16 | 0.28 |
| 170102 | 17XX02 | A or 4L | 0.50 | 0.75 | 0.20 | 0.38 |
| 170103 | 17XX03 | B or 5L | 0.63 | 1.25 | 0.29 | 0.47 |
| 170104 | 17XX04 | C | 0.75 | 1.38 | 0.39 | 0.56 |

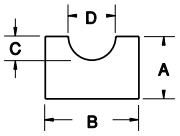


### Round Belt Guides—Plain

| UHMW | More UHMW Grades | Belt Type | A | B | C | D |
|---|---|---|---|---|---|---|
| 170109 | 17XX09 | 1/4 DIA | 0.38 | 0.75 | 0.16 | 0.31 |
| 170110 | 17XX10 | 5/16 DIA | 0.50 | 0.75 | 0.19 | 0.38 |
| 170111 | 17XX11 | 3/8 DIA | 0.63 | 1.00 | 0.22 | 0.44 |
| 170112 | 17XX12 | 1/2 DIA | 0.75 | 1.25 | 0.28 | 0.56 |
| 170113 | 17XX13 | 5/8 DIA | 1.00 | 1.25 | 0.35 | 0.69 |

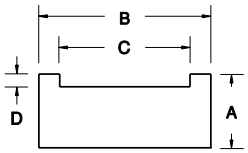


### Flat Belt Guide for Timing Belts

| UHMW | More UHMW Grades | Belt Type | pitch x width | A | B | C | D |
|---|---|---|---|---|---|---|---|
| 170131 | 17XX31 | XL | 1/5 X 3/8 | .40 | 0.79 | 0.41 | 0.06 |
| 170132 | 17XX32 | L | 3/8 X 1/2 | .47 | 0.79 | 0.54 | 0.10 |
| 170133 | 17XX33 | L | 3/8 X 3/4 | .59 | 1.18 | 0.79 | 0.10 |
| | | H | 1/2 X 3/4 | | | | |
| 170134 | 17XX34 | L | 3/8" X 1" | .59 | 1.39 | 1.04 | 0.10 |
| | | H | 1/2" X 1" | | | | |
| 170136 | 17XX36 | H | 1/2" X 1 1/2" | .71 | 1.88 | 1.59 | 0.12 |

STAINLESS AND GALVANIZED MOUNTING CHANNEL ARE SOLD SEPARATELY (SEE PAGE 26).

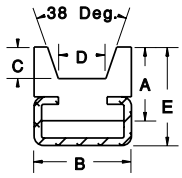


### V-Belt Guides—Mounted

| UHMW | More UHMW Grades | Belt Type | A | B | C | D | E | Channel Size |
|---|---|---|---|---|---|---|---|---|
| 170105 | 17XX05 | O or 3L | 0.59 | 0.78 | 0.16 | 0.28 | 0.79 | C3 |
| 170106 | 17XX06 | A or 4L | 0.59 | 0.78 | 0.20 | 0.38 | 0.79 | C3 |
| 170107 | 17XX07 | B or 5L | 0.59 | 1.10 | 0.29 | 0.47 | 0.79 | C5 |
| 170108 | 17XX08 | C | 0.81 | 1.10 | 0.39 | 0.56 | 1.04 | C5 |

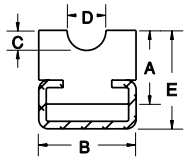


### Round Belt Guides—Mounted

| UHMW | More UHMW Grades | Belt Type | A | B | C | D | E | Channel Size |
|---|---|---|---|---|---|---|---|---|
| 170114 | 17XX14 | 1/4 DIA | 0.59 | 0.78 | 0.16 | 0.31 | 0.79 | C3 |
| 170115 | 17XX15 | 5/16 DIA | 0.59 | 0.78 | 0.19 | 0.38 | 0.79 | C3 |
| 170116 | 17XX16 | 3/8 DIA | 0.59 | 1.10 | 0.22 | 0.44 | 0.79 | C5 |
| 170117 | 17XX17 | 1/2 DIA | 0.59 | 1.10 | 0.28 | 0.56 | 0.79 | C5 |
| 170118 | 17XX18 | 5/8 DIA | 0.75 | 1.10 | 0.35 | 0.69 | 0.94 | C5 |

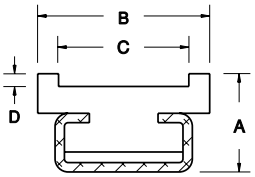


### Flat Belt Guide Insert for Timing Belts—Mounted

| UHMW | More UHMW Grades | Belt Type | pitch x width | A | B | C | D | Channel Size |
|---|---|---|---|---|---|---|---|---|
| 170141 | 17XX41 | XL | 1/5 X 3/8 | .63 | 0.79 | 0.41 | .06 | C3 |
| 170142 | 17XX42 | L | 3/8 X 1/2 | .71 | 0.79 | 0.54 | .10 | C3 |
| 170143 | 17XX43 | L | 3/8 X 3/4 | .71 | 1.18 | 0.79 | .10 | C3 |
| | | H | 1/2 X 3/4 | | | | | |
| 170144 | 17XX44 | L | 3/8" X 1" | .79 | 1.39 | 1.04 | .10 | C5 |
| | | H | 1/2" X 1" | | | | | |
| 170146 | 17XX46 | H | 1/2" X 1 1/2" | .95 | 1.88 | 1.59 | .12 | C9 |

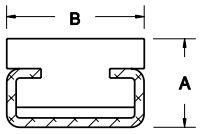


### Insert for Belt Support or Guide Rail—Mounted

| UHMW | More UHMW Grades | A | B | Channel Size |
|---|---|---|---|---|
| 170119 | 17XX19 | 0.79 | 0.79 | C3 |
| 170120 | 17XX20 | 0.63 | 1.10 | C5 |
| 170121 | 17XX21 | 1.16 | 1.50 | C9 |
| 170122 | 17XX22 | 1.03 | 1.10 | C5 |

# Adhesive-Backed, Cut and Extruded UHMW Wear Strips

## Benefits of Adhesive-Backed Wear Strips

- No drilling and bolting required
- Not using fasteners gives equipment a clean appearance
- Lower profile, so you can use thin strips of material and get all the benefits of UHMW
- Can be ordered at the width you need, from 1/4" to 24"
- Long rolls (50', 54', and 100') minimize seams
- Available in a range of thicknesses from .003" to .125"
- Using adhesive-backed wear strips is more sanitary than fasteners. The UHMW bonds completely to the conveyor frame, eliminating the possibility of bacteria growing between the frame and wearstrip or at the fasteners.

## UHMW Formulations

As with other Slideways products, adhesive-backed wear strips are available in many UHMW formulations to maximize performance. The high performance formulations include DrySlide, High-Temp/UHMW, UV Protected/UHMW and Anti-Static/UHMW. Adhesive-backed wear strips are available in Natural (white) and Black UHMW.

## Adhesive-Backed Components

Slideways helps you improve the appearance and sanitation of equipment with pressure-sensitive adhesive (PSA) backed chain guides, channels and belt guides. Consult with your Slideways representative to learn about proper surface preparation.

### 54' Skived Rolls (add .005" for adhesive)

| Width | 0.003" thick | 0.005" thick | 0.01" thick | 0.015" thick |
|---|---|---|---|---|
| 1/4" | 33010030025 | 33010050025 | 33010100025 | 33010150025 |
| 1/2" | 33010030050 | 33010050050 | 33010100050 | 33010150050 |
| 3/4" | 33010030075 | 33010050075 | 33010100075 | 33010150075 |
| 1" | 33010030100 | 33010050100 | 33010100100 | 33010150100 |
| 1 1/2" | 33010030150 | 33010050150 | 33010100150 | 33010150150 |
| 2" | 33010030200 | 33010050200 | 33010100200 | 33010150200 |
| 3" | 33010030300 | 33010050300 | 33010100300 | 33010150300 |
| 4" | 33010030400 | 33010050400 | 33010100400 | 33010150400 |
| 6" | 33010030600 | 33010050600 | 33010100600 | 33010150600 |
| 8" | 33010030800 | 33010050800 | 33010100800 | 33010150800 |
| 10" | 33010031000 | 33010051000 | 33010101000 | 33010151000 |
| 12" | 33010031200 | 33010051200 | 33010101200 | 33010151200 |
| 18" | 33010031800 | 33010051800 | 33010101800 | 33010151800 |
| 24" | 33010032400 | 33010052400 | 33010102400 | 33010152400 |

### 50' or 100' Skived Rolls (add .005" for adhesive)

| Width | 0.03" thick | 0.062" thick | 0.093" thick | 0.1" thick | 0.125" thick |
|---|---|---|---|---|---|
| 1/4" | — | — | — | — | — |
| 1/2" | 33010300050 | 33010620050 | 33010930050 | 33011000050 | 33011250050 |
| 3/4" | 33010300075 | 33010620075 | 33010930075 | 33011000075 | 33011250075 |
| 1" | 33010300100 | 33010620100 | 33010930100 | 33011000100 | 33011250100 |
| 1 1/2" | 33010300150 | 33010620150 | 33010930150 | 33011000150 | 33011250150 |
| 2" | 33010300200 | 33010620200 | 33010930200 | 33011000200 | 33011250200 |
| 3" | 33010300300 | 33010620300 | 33010930300 | 33011000300 | 33011250300 |
| 4" | 33010300400 | 33010620400 | 33010930400 | 33011000400 | 33011250400 |
| 6" | 33010300600 | 33010620600 | 33010930600 | 33011000600 | 33011250600 |
| 8" | 33010300800 | 33010620800 | 33010930800 | 33011000800 | 33011250800 |
| 10" | 33010301000 | 33010621000 | 33010931000 | 33011001000 | 33011251000 |
| 12" | 33010301200 | 33010621200 | 33010931200 | 33011001200 | 33011251200 |
| 18" | 33010301800 | 33010621800 | 33010931800 | 33011001800 | 33011251800 |
| 24" | 33010302400 | 33010622400 | 33010932400 | 33011002400 | 33011252400 |

### Cut Wear Strip

| Material | Thickness Range | Width Range | Length |
|---|---|---|---|
| UHMW and UHMW Formulations | 1/8" to 3" | 1/2" to 48" | 10 ft |
| MD-Nylon | 1/8" to 2" | 1/2" to 48" | up to 10 ft* |
| Nylon | 1/8" to 2" | 1/2" to 48" | 48" |
| Acetal | 1/4" to 2" | 1/2" to 48" | 48" |
| Teflon | 1/4"to 1" | 1/2" to 48" | 48" |

*Call for availability.

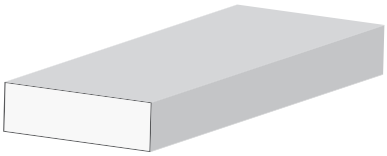

### Extruded UHMW Wear Strip in Coils

| Part No. | Thickness | Width* | Length |
|---|---|---|---|
| 14010216C100 | 1/8" | 1" | 100 ft |
| 14010224C100 | 1/8" | 1-1/2" | 100 ft |
| 14010248C100 | 1/8" | 3" | 100 ft |
| 14010416C250 | 1/4" | 1" | 250 ft |
| 14010424C250 | 1/4" | 1-1/2" | 250 ft |
| 14010432C250 | 1/4" | 2" | 250 ft |
| 14010448C250 | 1/4" | 3" | 250 ft |

*Additional widths are available.

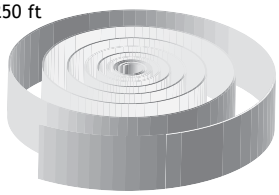

# Plastic Roller Chain Sprockets

Slideways Plastic Roller Chain Sprockets run more quietly and cause less chain wear than metal sprockets. Other benefits include corrosion resistance, lighter weight, greater impact resistance and FDA approved materials.

The compressibility of plastic materials results in greater tooth deflection than found on a metallic sprocket. Greater tooth deflection means that several teeth will bear the load of the chain, increasing the overall load capacity of the sprocket to approximately the full working load of the chain.

Applications include dusty or gritty environments, food applications requiring frequent wash-downs and areas where a quieter chain drive is needed.

Slideways Plastic Sprockets can be made in other materials than those shown in the following pages. Other sprocket materials include MD-Nylon, Repro UHMW, and Acetal.

**Sizes:** Slideways makes sprockets for metric chain, double pitch conveyor chains (2035 to 2100), double chain (35-2 to 120-2), and custom designs.

**Styles:** A-Plate and C-Hub sprockets are made to order.

**Bores:** Stock Bore: Sprocket is supplied with an unfinished bore

Idler Bore: Advise the shaft size and Slideways will provide the bore with proper clearance to idle on the shaft

Drive Bore: Sprocket will be drilled, keyed and have one set screw

Bearing Bore: For higher speed idler applications Slideways will provide the sprocket with a pressed-in ball bearing

## Other Types of Sprockets

Slideways also makes:

- Wire belt sprockets
- Wastewater treatment sprockets
- Modular belt sprockets
- Mill sprockets
- Tabletop chain sprockets

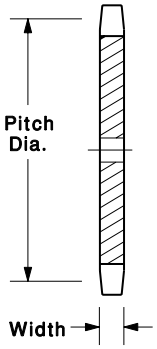


STYLE A

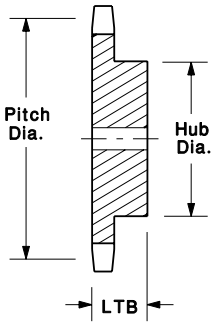


STYLE B

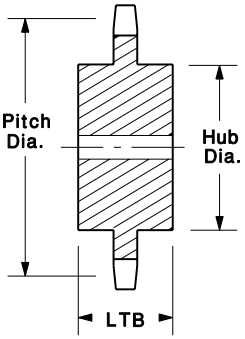


STYLE C

## No. 40, 1/2" Pitch

| No. of Teeth | UHMW | OF Nylon (Green) | Pitch Dia. | Stock Bore | Max. Bore | Hub Dia. | Length thru Bore |
|---|---|---|---|---|---|---|---|
| 14 | 290140B14 | 290940B14 | 2.247 | 1/2 | 3/4 | 1-11/16 | 7/8 |
| 15 | 290140B15 | 290940B15 | 2.405 | 1/2 | 7/8 | 1-13/16 | 7/8 |
| 16 | 290140B16 | 290940B16 | 2.563 | 1/2 | 15/16 | 2 | 7/8 |
| 17 | 290140B17 | 290940B17 | 2.721 | 1/2 | 1 | 2-1/8 | 1 |
| 18 | 290140B18 | 290940B18 | 2.879 | 1/2 | 1-1/8 | 2-5/16 | 1 |
| 19 | 290140B19 | 290940B19 | 3.038 | 1/2 | 1-1/4 | 2-1/2 | 1 |
| 20 | 290140B20 | 290940B20 | 3.196 | 1/2 | 1-1/4 | 2-5/8 | 1 |
| 21 | 290140B21 | 290940B21 | 3.355 | 1/2 | 1-1/4 | 2-3/4 | 1 |
| 22 | 290140B22 | 290940B22 | 3.513 | 1/2 | 1 3/8 | 2-7/8 | 1 |
| 23 | 290140B23 | 290940B23 | 3.672 | 1/2 | 1 3/8 | 3 | 1 |
| 24 | 290140B24 | 290940B24 | 3.831 | 1/2 | 1-1/2 | 3-1/4 | 1 |
| 25 | 290140B25 | 290940B25 | 3.989 | 1/2 | 1-1/2 | 3-1/4 | 1 |
| 26 | 290140B26 | 290940B26 | 4.148 | 1/2 | 1-1/2 | 3-1/4 | 1 |
| 27 | 290140B27 | 290940B27 | 4.307 | 1/2 | 1-1/2 | 3-1/4 | 1 |
| 28 | 290140B28 | 290940B28 | 4.466 | 1/2 | 1-1/2 | 3-1/4 | 1 |
| 29 | 290140B29 | 290940B29 | 4.625 | 1/2 | 1-1/2 | 3-1/4 | 1 |
| 30 | 290140B30 | 290940B30 | 4.783 | 1/2 | 1-1/2 | 3-1/4 | 1 |
| 31 | 290140B31 | 290940B31 | 4.942 | 1/2 | 1-1/2 | 3-1/4 | 1 |
| 32 | 290140B32 | 290940B32 | 5.101 | 1/2 | 1-1/2 | 3-1/4 | 1 |
| 33 | 290140B33 | 290940B33 | 5.260 | 1/2 | 1-1/2 | 3-1/4 | 1 |
| 34 | 290140B34 | 290940B34 | 5.419 | 1/2 | 1-1/2 | 3-1/4 | 1 |
| 35 | 290140B35 | 290940B35 | 5.578 | 1/2 | 1-1/2 | 3-1/4 | 1 |
| 36 | 290140B36 | 290940B36 | 5.737 | 1/2 | 1-1/2 | 3-1/4 | 1 |
| 37 | 290140B37 | 290940B37 | 5.896 | 1/2 | 1-1/2 | 3-1/4 | 1 |
| 38 | 290140B38 | 290940B38 | 6.055 | 1/2 | 1-1/2 | 3-1/4 | 1 |
| 40 | 290140B40 | 290940B40 | 6.373 | 3/4 | 1-3/4 | 3-1/2 | 1-1/8 |
| 41 | 290140B41 | 290940B41 | 6.582 | 3/4 | 1-3/4 | 3-1/2 | 1-1/8 |
| 42 | 290140B42 | 290940B42 | 6.691 | 3/4 | 1-3/4 | 3-1/2 | 1-1/8 |
| 43 | 290140B43 | 290940B43 | 6.850 | 3/4 | 1-3/4 | 3-1/2 | 1-1/8 |
| 45 | 290140B45 | 290940B45 | 7.168 | 3/4 | 1-3/4 | 3-1/2 | 1-1/8 |
| 48 | 290140B48 | 290940B48 | 7.645 | 3/4 | 1-3/4 | 3-1/2 | 1-1/8 |

## No. 50, 5/8" Pitch

| No. of Teeth | UHMW | OF Nylon (Green) | Pitch Dia. | Stock Bore | Max. Bore | Hub Dia. | Length thru B |
|---|---|---|---|---|---|---|---|
| 14 | 290150B14 | 290950B14 | 2.803 | 1/2 | 1 | 2-1/8 | 1 |
| 15 | 290150B15 | 290950B15 | 3.006 | 1/2 | 1-1/4 | 2-3/8 | 1 |
| 16 | 290150B16 | 290950B16 | 3.204 | 1/2 | 1-1/4 | 2-1/2 | 1 |
| 17 | 290150B17 | 290950B17 | 3.401 | 1/2 | 1-3/8 | 2-11/16 | 1 |
| 18 | 290150B18 | 290950B18 | 3.599 | 1/2 | 1-1/2 | 2-7/8 | 1 |
| 19 | 290150B19 | 290950B19 | 3.797 | 1/2 | 1-5/8 | 3 | 1 |
| 20 | 290150B20 | 290950B20 | 3.995 | 1/2 | 1-5/8 | 3 | 1 |
| 21 | 290150B21 | 290950B21 | 4.193 | 1/2 | 1-5/8 | 3 | 1 |
| 22 | 290150B22 | 290950B22 | 4.392 | 1/2 | 1-5/8 | 3 | 1 |
| 23 | 290150B23 | 290950B23 | 4.590 | 1/2 | 1-5/8 | 3 | 1 |
| 24 | 290150B24 | 290950B24 | 4.788 | 1/2 | 1-5/8 | 3 | 1-1/4 |
| 25 | 290150B25 | 290950B25 | 4.987 | 1/2 | 1-5/8 | 3 | 1-1/4 |
| 26 | 290150B26 | 290950B26 | 5.185 | 1/2 | 1-5/8 | 3 | 1-1/4 |
| 27 | 290150B27 | 290950B27 | 5.384 | 1/2 | 1-5/8 | 3 | 1-1/4 |
| 28 | 290150B28 | 290950B28 | 5.582 | 1/2 | 1-5/8 | 3 | 1-1/4 |
| 29 | 290150B29 | 290950B29 | 5.781 | 1/2 | 1-5/8 | 3 | 1-1/4 |
| 30 | 290150B30 | 290950B30 | 5.979 | 1/2 | 1-3/4 | 3-1/4 | 1-1/4 |
| 31 | 290150B31 | 290950B31 | 6.178 | 1/2 | 1-3/4 | 3-1/4 | 1-1/4 |
| 32 | 290150B32 | 290950B32 | 6.376 | 1/2 | 1-3/4 | 3-1/4 | 1-1/4 |
| 33 | 290150B33 | 290950B33 | 6.575 | 1/2 | 1-3/4 | 3-1/4 | 1-1/4 |
| 34 | 290150B34 | 290950B34 | 6.774 | 1/2 | 1-3/4 | 3-1/4 | 1-1/4 |
| 35 | 290150B35 | 290950B35 | 6.972 | 1/2 | 1-3/4 | 3-1/4 | 1-1/4 |
| 36 | 290150B36 | 290950B36 | 7.171 | 1/2 | 1-3/4 | 3-1/4 | 1-1/4 |
| 37 | 290150B37 | 290950B37 | 7.370 | 1/2 | 1-3/4 | 3-1/4 | 1-1/4 |
| 38 | 290150B38 | 290950B38 | 7.568 | 1/2 | 1-3/4 | 3-1/4 | 1-1/4 |
| 40 | 290150B40 | 290950B40 | 7.966 | 3/4 | 2 | 3-1/2 | 1-1/4 |
| 41 | 290150B41 | 290950B41 | 8.165 | 3/4 | 2 | 3-1/2 | 1-1/4 |
| 42 | 290150B42 | 290950B42 | 8.363 | 3/4 | 2 | 3-1/2 | 1-1/4 |
| 43 | 290150B43 | 290950B43 | 8.562 | 3/4 | 2 | 3-1/2 | 1-1/4 |
| 45 | 290150B45 | 290950B45 | 8.960 | 3/4 | 2-3/8 | 4 | 1-1/4 |
| 48 | 290150B48 | 290950B48 | 9.556 | 3/4 | 2-3/8 | 4 | 1-1/4 |

## No. 60, 3/4" Pitch

| No. of Teeth | UHMW | Pitch Dia. | Stock Bore | Max. Bore | Hub Dia. | Length thru Bore |
|---|---|---|---|---|---|---|
| 14 | 290160B14 | 3.370 | 3/4 | 1 | 2-1/2 | 1-1/4 |
| 15 | 290160B15 | 3.607 | 3/4 | 1 | 2-7/8 | 1-1/4 |
| 16 | 290160B16 | 3.844 | 3/4 | 1 | 3 | 1-1/4 |
| 17 | 290160B17 | 4.082 | 1 | 2 | 3-1/4 | 1-1/4 |
| 18 | 290160B18 | 4.319 | 1 | 2 | 3-1/2 | 1-1/4 |
| 19 | 290160B19 | 4.557 | 1 | 2 | 3-1/2 | 1-1/4 |
| 20 | 290160B20 | 4.794 | 1 | 2 | 3-7/8 | 1-1/4 |
| 21 | 290160B21 | 5.032 | 1 | 2 | 4 | 1-1/4 |
| 22 | 290160B22 | 5.270 | 1 | 2 | 4 | 1-1/4 |
| 23 | 290160B23 | 5.508 | 1 | 2 | 4 | 1-1/4 |
| 24 | 290160B24 | 5.746 | 1 | 2 | 4 | 1-1/4 |
| 25 | 290160B25 | 5.984 | 1 | 2 | 4 | 1-1/4 |
| 26 | 290160B26 | 6.222 | 1 | 2-1/2 | 4 | 1-1/4 |
| 27 | 290160B27 | 6.460 | 1 | 2-1/2 | 4 | 1-1/4 |
| 28 | 290160B28 | 6.699 | 1 | 2-1/2 | 4 | 1-1/4 |
| 29 | 290160B29 | 6.937 | 1 | 2-1/2 | 4 | 1-1/4 |
| 30 | 290160B30 | 7.175 | 1 | 2-1/2 | 4 | 1-1/4 |
| 31 | 290160B31 | 7.413 | 1 | 2-1/2 | 4 | 1-1/4 |
| 32 | 290160B32 | 7.652 | 1 | 2-1/2 | 4 | 1-1/4 |
| 33 | 290160B33 | 7.890 | 1 | 2-1/2 | 4 | 1-1/4 |
| 34 | 290160B34 | 8.128 | 1 | 3 | 4-1/2 | 1-1/4 |
| 35 | 290160B35 | 8.367 | 1 | 3 | 4-1/2 | 1-1/4 |
| 36 | 290160B36 | 8.605 | 1 | 3 | 4-1/2 | 1-1/4 |
| 37 | 290160B37 | 8.844 | 1 | 3 | 4-1/2 | 1-1/4 |
| 38 | 290160B38 | 9.082 | 1 | 3 | 4-1/2 | 1-1/4 |
| 40 | 290160B40 | 9.559 | 1 | 3 | 4-1/2 | 1-1/4 |
| 41 | 290160B41 | 9.798 | 1 | 3 | 4-1/2 | 1-1/4 |
| 42 | 290160B42 | 10.036 | 1 | 3-1/2 | 5 | 1-1/4 |
| 43 | 290160B43 | 10.275 | 1 | 3-1/2 | 5 | 1-1/4 |
| 45 | 290160B45 | 10.752 | 1 | 3-1/2 | 5 | 1-1/4 |
| 48 | 290160B48 | 11.467 | 1 | 3-1/2 | 5 | 1-1/4 |
| 50 | 290160B50 | 11.944 | 1 | 3-1/2 | 5 | 1-1/4 |

## No. 80, 1" Pitch

| No. of Teeth | UHMW | Pitch Dia. | Stock Bore | Max. Bore | Hub Dia. | Length thru Bore |
|---|---|---|---|---|---|---|
| 15 | 290180B15 | 4.810 | 1 | 2 | 3-1/4 | 1-1/2 |
| 16 | 290180B16 | 5.126 | 1 | 2 | 3-1/4 | 1-1/2 |
| 17 | 290180B17 | 5.442 | 1 | 2 | 3-1/4 | 1-1/2 |
| 18 | 290180B18 | 5.759 | 1 | 2 | 3-1/4 | 1-1/2 |
| 19 | 290180B19 | 6.076 | 1 | 2-1/2 | 4 | 1-1/2 |
| 20 | 290180B20 | 6.392 | 1 | 2-1/2 | 4 | 1-1/2 |
| 21 | 290180B21 | 6.710 | 1 | 2-1/2 | 4 | 1-3/4 |
| 22 | 290180B22 | 7.027 | 1 | 2-1/2 | 4 | 1-3/4 |
| 23 | 290180B23 | 7.344 | 1 | 2-1/2 | 4 | 1-3/4 |
| 24 | 290180B24 | 7.661 | 1 | 2-1/2 | 4 | 1-3/4 |
| 25 | 290180B25 | 7.979 | 1 | 2-1/2 | 4 | 1-3/4 |
| 26 | 290180B26 | 8.296 | 1 | 3 | 4-1/2 | 2 |
| 27 | 290180B27 | 8.614 | 1 | 3 | 4-1/2 | 2 |
| 28 | 290180B28 | 8.931 | 1 | 3 | 4-1/2 | 2 |
| 29 | 290180B29 | 9.249 | 1 | 3 | 4-1/2 | 2 |
| 30 | 290180B30 | 9.567 | 1 | 3 | 4-1/2 | 2 |
| 31 | 290180B31 | 9.885 | 1 | 3 | 4-1/2 | 2 |
| 32 | 290180B32 | 10.202 | 1 | 3-1/2 | 5 | 2 |
| 33 | 290180B33 | 10.520 | 1 | 3-1/2 | 5 | 2 |
| 34 | 290180B34 | 10.838 | 1 | 3-1/2 | 5 | 2 |
| 35 | 290180B35 | 11.156 | 1 | 3-1/2 | 5 | 2 |
| 36 | 290180B36 | 11.474 | 1 | 3-1/2 | 5 | 2 |
| 37 | 290180B37 | 11.792 | 1 | 3-1/2 | 5 | 2 |
| 38 | 290180B38 | 12.110 | 1 | 4 | 5-1/2 | 2 |
| 40 | 290180B40 | 12.746 | 1 | 4 | 5-1/2 | 2 |
| 41 | 290180B41 | 13.063 | 1 | 4 | 5-1/2 | 2 |
| 42 | 290180B42 | 13.382 | 1 | 4 | 5-1/2 | 2 |
| 45 | 290180B45 | 14.336 | 1 | 4 | 6 | 2 |
| 48 | 290180B48 | 15.290 | 1 | 4 | 6 | 2 |
| 49 | 290180B49 | 15.608 | 1 | 4 | 6 | 2 |
| 50 | 290180B50 | 15.926 | 1 | 4 | 6 | 2 |

# Slideways Custom Components

*Custom star wheels for filling applications*

*Custom chain guides*

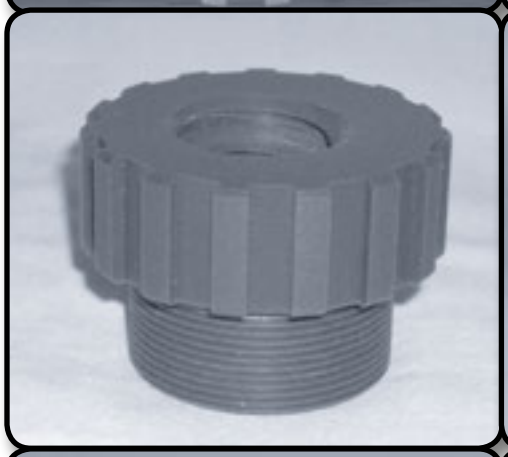

*Ball screw nut for a paper mill application*

*Sprockets for wastewater treatment facilities*

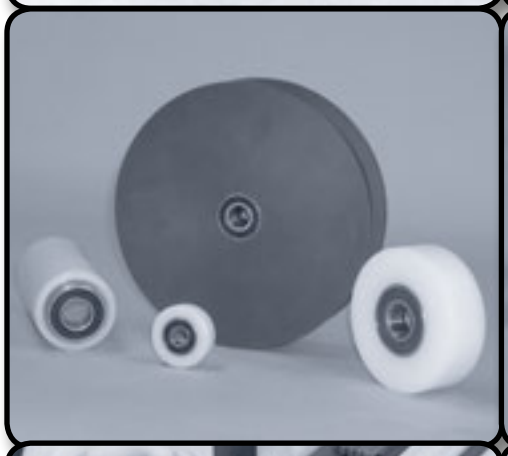

*Ball bearings inserted in custom pulleys and sheaves*

*Custom rollers*

*Specialty conveyor and packaging components*

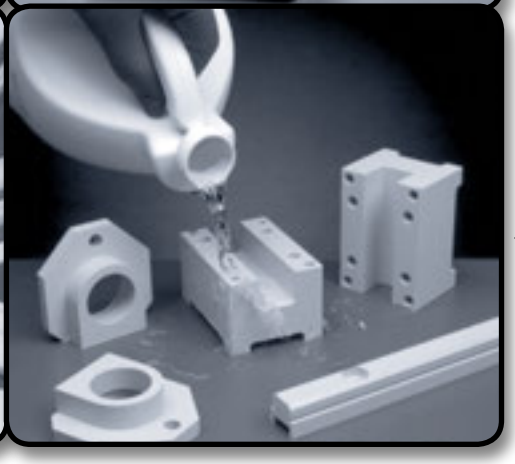

*Plastic parts for corrosive environments*

## UHMW Line Shaft Pulleys

Impact-resistant UHMW makes superior line shaft pulleys. Flanges do not fatigue and crack as molded pulleys often do.

**One-Piece Design:** P/N LSP321620 Long-lasting, rugged pulley.

**Split Design:** P/N LSP321620S Quickly and easily replace old pulleys with these rugged parts. With the split design, you can install this pulley without the time-consuming removal of the drive shaft.

**Split Design with Side Grooves:** P/N ESP321620 Provides the same great benefits outlined above, with side grooves for line shaft conveyers with spacers between pulleys.

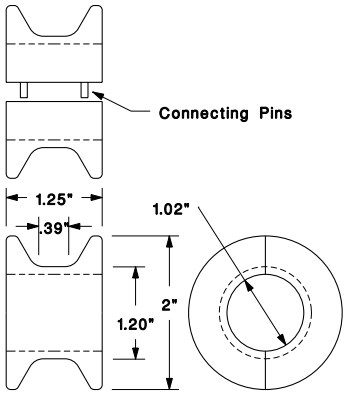


### V-Belt Pulleys

| UHMW | Belt Size | OD | Pitch Dia. | Width | Stock Bore |
|---|---|---|---|---|---|
| 110101 | A | 1.75 | 1.5 | 3/4 | 1/4 |
| 110104 | | 2.25 | 2 | 3/4 | 1/4 |
| 110108 | | 2.75 | 2.5 | 3/4 | 1/4 |
| 110111 | | 3.25 | 3 | 3/4 | 1/4 |
| 110112 | | 3.45 | 3.2 | 3/4 | 1/2 |
| 110113 | | 3.65 | 3.4 | 3/4 | 1/2 |
| 110114 | | 3.85 | 3.6 | 3/4 | 1/2 |
| 110115 | | 4.05 | 3.8 | 3/4 | 1/2 |
| 110116 | B | 3.75 | 3.4 | 1 | 1/2 |
| 110118 | | 4.15 | 3.8 | 1 | 1/2 |
| 110119 | | 4.35 | 4 | 1 | 1/2 |
| 110121 | | 4.75 | 4.4 | 1 | 1/2 |
| 110122 | | 4.95 | 4.6 | 1 | 1/2 |
| 110123 | | 5.15 | 4.8 | 1 | 1/2 |
| 110124 | | 5.35 | 5 | 1 | 1/2 |
| 110126 | | 5.75 | 5.4 | 1 | 1/2 |
| 110127 | | 5.95 | 5.6 | 1 | 1/2 |

### Round Belt Pulleys

| UHMW | Belt Dia. | OD | Width | Stock Bore |
|---|---|---|---|---|
| 110128 | 1/4 | 1.5 | 1/2 | 1/4 |
| 110129 | | 2 | 1/2 | 1/4 |
| 110130 | | 2.5 | 1/2 | 1/4 |
| 110131 | | 3 | 1/2 | 1/2 |
| 110132 | | 3.5 | 1/2 | 1/2 |
| 110133 | | 4 | 1/2 | 1/2 |
| 110134 | 3/8 | 2 | 5/8 | 1/4 |
| 110135 | | 2.5 | 5/8 | 1/4 |
| 110136 | | 3 | 5/8 | 1/4 |
| 110137 | | 3.5 | 5/8 | 1/2 |
| 110138 | | 4 | 5/8 | 1/2 |
| 110139 | 1/2 | 3 | 3/4 | 1/4 |
| 110140 | | 3.5 | 3/4 | 1/2 |
| 110141 | | 4 | 3/4 | 1/2 |
| 110142 | | 4.5 | 3/4 | 1/2 |
| 110143 | | 5 | 3/4 | 1/2 |
| 110144 | | 5.5 | 3/4 | 1/2 |

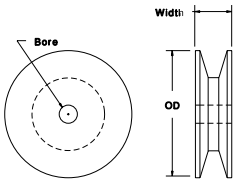


V-BELT PULLEYS

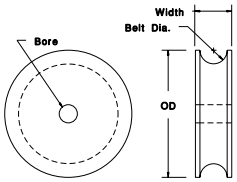


ROUND BELT PULLEYS

## Additional Pulleys

Round belt, V-belt and Flat belt pulleys made to order:

- With or without hubs
- Key ways
- Set screws
- Ball bearings
- Multiple grooves

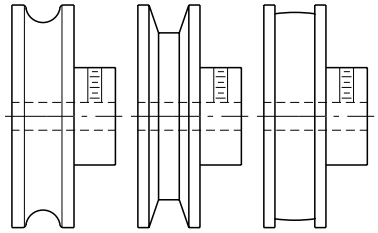

### Slideways Successes: Pulleys

**The Challenge:** An exercise equipment manufacturer needed 2,500 custom pulleys, fast!

**The Slideways Solution:** We shipped parts in two weeks which not only met their deadline but saved them the cost of injection mold tooling.

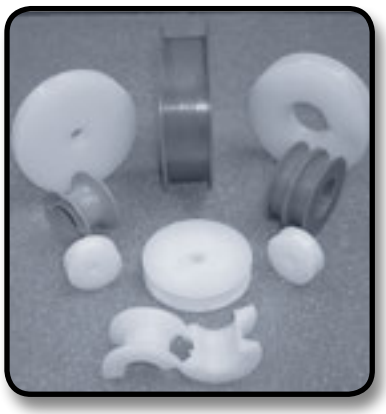

# Custom Made Rollers

Slideways fabricates rollers to your specification, applying our experience in materials and design to provide an economical roller with an extended useful life.

Component materials of choice include:

- **Tubing:** plastic, steel, stainless and others
- **Bearings:** UHMW, Nylon, plastic ball bearings, steel ball bearings
- **Shafting:** steel, stainless steel, stub shafts

Design options include:

- Cotter pin holes in shaft
- Threaded ends on shaft
- Grooves for drive belts
- Sprocket drive ends
- Crowned rollers
- And more!

To receive a quote, please provide roller diameter, distance between supports, shaft length and any other feature you require.

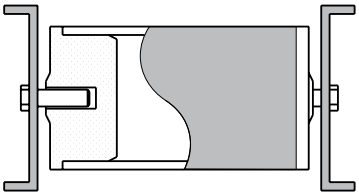

BLIND BORE IDLER (SELF SEALING)

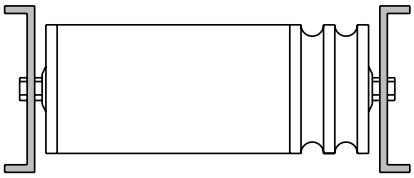

ROUND BELT OR V-BELT DRIVEN ROLLER

BELT TROUGHING IDLER

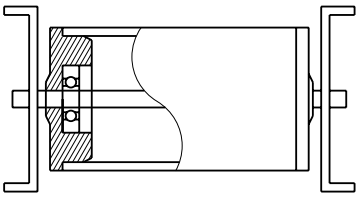

BALL BEARING ROLLERS

## Slideways Successes: Rollers

**The Challenge:** Rollers used in a commercial composting facility were failing prematurely due to the damp, corrosive environment.

**The Slideways Solution:** Since water is an excellent lubricant for UHMW, Slideways recommended replacing the steel rollers with an all-plastic roller constructed with PVC tubing and UHMW bearings. The rollers have been in service for years with no maintenance.

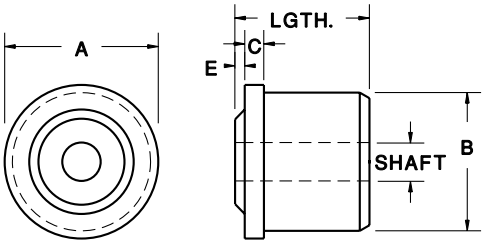


Specify shaft size for quotes or when placing an order.

## Standard Duty Roll End Bearings

| Wood | UHMW | OF/ UHMW | A (Tube OD) | Gauge (Wall Thk.) | B (Tube ID) | Length | C | E |
|---|---|---|---|---|---|---|---|---|
| 0304048 | 0301048 | 0303048 | 1-3/8 | 18 | 1.277 | 1-1/4 | 3/16 | 1/16 |
| 0304049 | 0301049 | 0303049 | | 16 | 1.245 | 1-1/4 | 3/16 | 1/16 |
| 0304050 | 0301050 | 0303050 | 1-1/2 | 18 | 1.402 | 1-1/2 | 3/16 | 1/16 |
| 0304051 | 0301051 | 0303051 | | 16 | 1.370 | 1-1/2 | 3/16 | 1/16 |
| 0304052 | 0301052 | 0303052 | | 14 | 1.334 | 1-1/2 | 3/16 | 1/16 |
| 0304054 | 0301054 | 0303054 | 1-5/8 | 16 | 1.495 | 1-1/2 | 3/16 | 1/16 |
| 0304055 | 0301055 | 0303055 | | 11 | 1.385 | 1-1/2 | 3/16 | 1/16 |
| 0304056 | 0301056 | 0303056 | 1.660 | 1-1/4 SCH 40 | 1.380 | 1-1/2 | 3/16 | 1/16 |
| 0304057 | 0301057 | 0303057 | | 1-1/4 SCH 80 | 1.278 | 1-1/2 | 3/16 | 1/16 |
| 0304059 | 0301059 | 0303059 | 1-3/4 | 16 | 1.620 | 1-1/2 | 3/16 | 1/16 |
| 0304060 | 0301060 | 0303060 | | 14 | 1.584 | 1-1/2 | 3/16 | 1/16 |
| 0304065 | 0301065 | 0303165 | 1.900 | 1-1/2 SCH 40 | 1.610 | 1-1/2 | 3/16 | 1/16 |
| 0304066 | 0301066 | 0303166 | | 1-1/2 SCH 80 | 1.500 | 1-1/2 | 3/16 | 1/16 |
| 0304069 | 0301069 | 0303069 | 2 | 16 | 1.870 | 1-5/8 | 1/4 | 1/8 |
| 0304070 | 0301070 | 0303070 | | 14 | 1.834 | 1-5/8 | 1/4 | 1/8 |
| 0304072 | 0301072 | 0303072 | | 11 | 1.760 | 1-5/8 | 1/4 | 1/8 |
| 0304073 | 0301073 | 0303073 | 2.197 | 2 EMT | 2.067 | 1-5/8 | 1/4 | 1/8 |
| 0304074 | 0301074 | 0303074 | 2-1/4 | 18 | 2.152 | 1-5/8 | 1/4 | 1/8 |
| 0304075 | 0301075 | 0303075 | | 16 | 2.120 | 1-5/8 | 1/4 | 1/8 |
| 0304076 | 0301076 | 0303076 | | 14 | 2.084 | 1-5/8 | 1/4 | 1/8 |
| 0304080 | 0301080 | 0303080 | 2-3/8 | 16 | 2.245 | 1-5/8 | 1/4 | 1/8 |
| 0304081 | 0301081 | 0303081 | | 13 | 2.185 | 1-5/8 | 1/4 | 1/8 |
| 0304083 | 0301083 | 0303083 | 2.375 | 2 SCH 40 | 2.067 | 1-5/8 | 1/4 | 1/8 |
| 0304084 | 0301084 | 0303084 | | 2 SCH 80 | 1.939 | 1-5/8 | 1/4 | 1/8 |
| 0304085 | 0301085 | 0303085 | 2-1/2 | 16 | 2.370 | 1-5/8 | 1/4 | 1/8 |
| 0304086 | 0301086 | 0303086 | | 14 | 2.334 | 1-5/8 | 1/4 | 1/8 |
| 0304087 | 0301087 | 0303087 | | 13 | 2.310 | 1-5/8 | 1/4 | 1/8 |
| 0304090 | 0301090 | 0303090 | 2-3/4 | 16 | 2.620 | 1-5/8 | 1/4 | 1/8 |
| 0304091 | 0301091 | 0303090 | | 13 | 2.560 | 1-5/8 | 1/4 | 1/8 |
| 0304093 | 0301093 | 0303093 | 2.875 | 2-1/2 SCH 40 | 2.469 | 1-5/8 | 1/4 | 1/8 |
| 0304094 | 0301094 | 0303094 | | 2-1/2 SCH 80 | 2.323 | 1-5/8 | 1/4 | 1/8 |
| 0304095 | 0301095 | 0303095 | 3 | 16 | 2.870 | 1-3/4 | 1/4 | 1/8 |
| 0304096 | 0301096 | 0303096 | | 14 | 2.834 | 1-3/4 | 1/4 | 1/8 |
| 0304097 | 0301097 | 0303097 | | 13 | 2.810 | 1-3/4 | 1/4 | 1/8 |
| 0304098 | 0301098 | 0303098 | | 11 | 2.760 | 1-3/4 | 1/4 | 1/8 |
| 0304104 | 0301104 | 0303104 | 3.5 | 3 SCH 40 | 3.068 | 1-3/4 | 1/4 | 1/8 |
| 0304105 | 0301105 | 0303105 | | 3 SCH 80 | 2.900 | 1-3/4 | 1/4 | 1/8 |
| 0304108 | 0301108 | 0303108 | 4 | 16 | 3.870 | 1-3/4 | 1/4 | 1/8 |
| 0304109 | 0301109 | 0303109 | | 14 | 3.834 | 1-3/4 | 1/4 | 1/8 |
| 0304110 | 0301110 | 0303110 | | 13 | 3.810 | 1-3/4 | 1/4 | 1/8 |
| 0304111 | 0301111 | 0303111 | | 11 | 3.760 | 1-3/4 | 1/4 | 1/8 |
| 0304112 | 0301112 | 0303112 | 4.000 | 3-1/2 SCH 40 | 3.548 | 1-3/4 | 1/4 | 1/8 |
| 0304113 | 0301113 | 0303113 | | 3-1/2 SCH 80 | 3.364 | 1-3/4 | 1/4 | 1/8 |
| 0304114 | 0301114 | 0303114 | 5 | 11 | 4.760 | 1-3/4 | 1/4 | 1/8 |
| 0304115 | 0301115 | 0303115 | 6 | 11 | 5.760 | 1-3/4 | 1/4 | 1/8 |
| 0304116 | 0301116 | 0303116 | 6.625 | 6 SCH 40 | 6.065 | 1-3/4 | 1/4 | 1/8 |
| 0304117 | 0301117 | 0303117 | | 6 SCH 80 | 5.761 | 1-3/4 | 1/4 | 1/8 |

# Solidur Interchange Table

| Solidur Number | Description | Slideways Number |
|---|---|---|
| EP101 | 1 1/4" X 4 1/4" UHMW CHANNEL GUIDE | 230111 |
| EP103 | 1" X 2 1/2" UHMW CHANNEL GUIDE | 230107 |
| EP104 | 1" X 2" UHMW CHANNEL GUIDE | 230108 |
| EP105 | 7/8" X 1 1/2" UHMW CHANNEL GUIDE | 230106 |
| EP106 | 3/4" 1" UHMW CHANNEL GUIDE | 230104 |
| EP111 | 1" X 3' UHMW CHANNEL GUIDE | 230109 |
| EP201 | 1/4" 1 1/2" X 1 1/2" UHMW ANGLE | 200103 |
| EP202 | 1/4" 2" X 2" UHMW ANGLE | 220104 |
| EP203 | 1/2" 3" X 3" UHMW ANGLE | 220107 |
| EP208 | 1/2" 3 1/2" X 3 1/2" UHMW ANGLE | 220108 |
| EP210 | 1/4" 5/8" X 1 1/2" UHMW ANGLE | 220102 |
| EP220 | 1/8" 1" X 1" UHMW ANGLE | 220101 |
| EP221 | 1/8" 1 1/2" X 1 1/2" UHMW ANGLE | 220105 |
| EP222 | 1/8" 2" X 2" UHMW ANGLE | 220106 |
| EP401 | UHMW RAIL COVER | 190120 |
| EP941 | UHMW GUIDE RAIL | 39461 |
| EP942 | UHMW GUIDE RAIL | 39465 |
| EP943 | UHMW GUIDE RAIL | 39469 |
| EP944 | UHMW GUIDE RAIL | 39475 |
| EP945 | UHMW GUIDE RAIL | 39477 |
| EP946 | UHMW GUIDE RAIL | 39473 |
| EP947 | UHMW GUIDE RAIL | 39479 |
| EPP301 | 1/2" UHMW HALF ROUND | 200114 |
| EPP302 | 3/8" UHMW HALF ROUND | 200113 |
| EPP304 | 3/4" UHMW HALF ROUND | 200115 |
| EPP350 | 5/8" UHMW FULL ROUND | 200112 |
| EPP351 | 1/2" UHMW FULL ROUND | 200111 |
| EPP352 | 3/8" UHMW FULL ROUND | 200110 |
| EPP601 | UHMW "J" LEG | 210118 |
| EPP602 | UHMW "J" LEG | 210104 |
| EPP603 | UHMW "J" LEG | 210105 |
| EPP604 | UHMW "J" LEG | 210120 |
| EPP606 | UHMW "J" LEG | 210106 |
| EPP620 | UHMW "J" LEG | 210121 |
| EPP621 | UHMW "J" LEG | 210101 |
| EPP622 | UHMW "J" LEG | 210102 |
| EPP623 | UHMW "J" LEG | 210103 |
| EPP625 | UHMW "J" LEG | 210107 |
| EPP626 | UHMW "J" LEG | 210108 |
| EPP628 | UHMW "J" LEG | 210109 |
| EPP636 | UHMW "J" LEG | 210119 |
| EPP704 | UHMW RAIL COVER | 190106 |
| EPP705 | UHMW RAIL COVER | 190107 |
| EPP706 | UHMW RAIL COVER | 190121 |
| EPP707 | UHMW RAIL COVER | 190108 |
| EPP708 | UHMW RAIL COVER | 190118 |
| EPP801 | UHMW SNAP ON | 200105 |
| EPP802 | UHMW SNAP ON | 200121 |
| EPP804 | UHMW SNAP ON | 200119 |
| EPP806 | UHMW SNAP ON | 200101 |
| EPP824 | UHMW SNAP ON | 200120 |
| EPP825 | UHMW SNAP ON | 200104 |
| EPP834 | UHMW SNAP ON | 200103 |
| EPP851 | UHMW SNAP ON | 200102 |
| EPP861 | UHMW "J" LEG | 210116 |
| EPP903 | UHMW RAIL COVER | 190102 |
| EPP904 | UHMW RAIL COVER | 190101 |
| EPP954 | UHMW RAIL COVER ASSEMBLY | 190104 / 181805 |
| EPP955 | UHMW RAIL COVER ASSEMBLY | 190101 / 181802 |
| EPP957 | UHMW RAIL COVER ASSEMBLY | 100102 / 181802 |
| EUHC1040 | CHANNEL STYLE GUIDE FOR ANSI #2040 CHAIN | 1601001 |
| EUHC1050 | CHANNEL STYLE GUIDE FOR ANSI #2050 CHAIN | 1601002 |
| EUHC1060 | CHANNEL STYLE GUIDE FOR ANSI #2060 CHAIN | 1601003 |
| EUHC1080 | CHANNEL STYLE GUIDE FOR ANSI #2080 CHAIN | 1601004 |
| EUHC1100 | CHANNEL STYLE GUIDE FOR ANSI #2100 CHAIN | 1601005 |
| EUHC1120 | CHANNEL STYLE GUIDE FOR ANSI #2120 CHAIN | 1601006 |
| EUHC2040 | CHANNEL WITH RAISED TRACK GUIDE FOR ANSI #2040 CHAIN | 1601037 |
| EUHC2050 | CHANNEL WITH RAISED TRACK GUIDE FOR ANSI #2050 CHAIN | 1601038 |
| EUHC2060 | CHANNEL WITH RAISED TRACK GUIDE FOR ANSI #2060 CHAIN | 1601039 |
| EUHC2080 | CHANNEL WITH RAISED TRACK GUIDE FOR ANSI #2080 CHAIN | 1601040 |
| EUHC5040 | RAISED TRACK GUIDE FOR ANSI #2040 CHAIN | 1601025 |
| EUHC5050 | RAISED TRACK GUIDE FOR ANSI #2050 CHAIN | 1601026 |
| EUHC5060 | RAISED TRACK GUIDE FOR ANSI #2060 CHAIN | 1601027 |
| EUHC5080 | RAISED TRACK GUIDE FOR ANSI #2080 CHAIN | 1601028 |
| EUHC5100 | RAISED TRACK GUIDE FOR ANSI #2100 CHAIN | 1601029 |
| EUHC5120 | RAISED TRACK GUIDE FOR ANSI #2120 CHAIN | 1601030 |
| EUHK1216 | 1/8" X 1" COILED WEAR STRIP (100') | 14010216C100 |
| EUHK1224 | 1/8" 1 1/2" COILED WEAR STRIP ( 100') | 14010224C100 |
| EUHK1416 | 1/4" X 1" COILED WEAR STRIP (250') | 14010416C250 |
| EUHK1424 | 1/4" X 1 1/2" COILED WEAR STRIP (250') | 14010424C250 |
| EUHK1432 | 1/4" X 2" COILED WEAR STRIP (250') | 14010448C250 |
| EUHU1131 | CHANNEL MOUNTED ROUND BELT GUIDE | 170114 |
| EUHU1138 | CHANNEL MOUNTED ROUND BELT GUIDE | 170115 |
| EUHU1144 | CHANNEL MOUNTED ROUND BELT GUIDE | 170116 |
| EUHU1156 | CHANNEL MOUNTED ROUND BELT GUIDE | 170117 |
| EUHU1169 | CHANNEL MOUNTED ROUND BELT GUIDE | 170118 |
| EUHU1425 | CHANNEL MOUNTED "V" BELT GUIDE | 170105 |
| EUHU1438 | CHANNEL MOUNTED "V" BELT GUIDE | 170106 |
| EUHU1447 | CHANNEL MOUNTED "V" BELT GUIDE | 170107 |
| EUHU1456 | CHANNEL MOUNTED "V" BELT GUIDE | 170108 |
| EUHU2006 | ROUND BELT GUIDE | 170109 |
| EUHU2008 | ROUND BELT GUIDE | 170110 |
| EUHU2012 | ROUND BELT GUIDE | 170112 |
| EUHU2015 | ROUND BELT GUIDE | 170113 |
| EUHU2020 | ROUND BELT GUIDE | 170111 |
| EUHU2208 | "V" BELT GUIDE | 170101 |
| EUHU2213 | "V" BELT GUIDE | 170102 |
| EUHU2217 | "V" BELT GUIDE | 170103 |
| EUHU2222 | "V" BELT GUIDE | 170104 |
| EUHU2810 | TYPE T ANSI CHAIN #100 GUIDE | 1601126 |
| EUHU2812 | TYPE T ANSI CHAIN #120 GUIDE | 1601127 |
| EUHU2835 | TYPE T ANSI CHAIN #35 GUIDE | 1601121 |
| EUHU2840 | TYPE T ANSI CHAIN #40 GUIDE | 1601122 |
| EUHU2850 | TYPE T ANSI CHAIN #50 GUIDE | 1601123 |

| Solidur Number | Description | Slideways Number |
|---|---|---|
| EUHU2860 | TYPE T ANSI CHAIN #60 GUIDE | 1601124 |
| EUHU2880 | TYPE T ANSI CHAIN #80 GUIDE | 1601125 |
| EUHU2935 | TYPE TD DOUBLE STRAND ANSI #35-2 GUIDE | 1601131 |
| EUHU2940 | TYPE TD DOUBLE STRAND ANSI #40-2 GUIDE | 1601132 |
| EUHU2950 | TYPE TD DOUBLE STRAND ANSI #50-2 GUIDE | 1601133 |
| EUHU2960 | TYPE TD DOUBLE STRAND ANSI #60-2 GUIDE | 1601134 |
| EUHU2980 | TYPE TD DOUBLE STRAND ANSI #80-2 GUIDE | 1601135 |
| EUHU3035 | TYPE U ANSI CHAIN #35 GUIDE | 1601091 |
| EUHU3040 | TYPE U ANSI CHAIN #40 GUIDE | 1601092 |
| EUHU3050 | TYPE U ANSI CHAIN #50 GUIDE | 1601093 |
| EUHU3060 | TYPE U ANSI CHAIN #60 GUIDE | 1601094 |
| EUHU3080 | TYPE U ANSI CHAIN #80 GUIDE | 1601095 |
| EUHU3135 | TYPE K ANSI CHAIN # 35 GUIDE | 1601101 |
| EUHU3140 | TYPE K ANSI CHAIN # 40 GUIDE | 1601102 |
| EUHU3150 | TYPE K ANSI CHAIN #50 GUIDE | 1601103 |
| EUHU3160 | TYPE K ANSI CHAIN #60 GUIDE | 1601104 |
| EUHU3180 | TYPE K ANSI CHAIN #80 GUIDE | 1601104 |
| EUHU3340 | TYPE CT GUIDE ASSEMBLY FOR ANSI #40 CHAIN | 1601044 / 181606 |
| EUHU3350 | TYPE CT GUIDE ASSEMBLY FOR ANSI #50 CHAIN | 1601045 / 181606 |
| EUHU3360 | TYPE CT GUIDE ASSEMBLY FOR ANSI #60 CHAIN | 1601046 / 181607 |
| EUHU3380 | TYPE CT GUIDE ASSEMBLY FOR ANSI #80 CHAIN | 1601047 / 181607 |
| EUHU3440 | TYPE CTD GUIDE ASSEMBLY FOR ANSI #40 CHAIN | 1601048 / 181606 |
| EUHU3450 | TYPE CTD GUIDE ASSEMBLY FOR ANSI #50 CHAIN | 1601049 / 181607 |
| EUHU3460 | TYPE CTD GUIDE ASSEMBLY FOR ANSI #60 CHAIN | 1601050 / 181607 |
| EUHU3480 | TYPE CTD GUIDE ASSEMBLY FOR ANSI #80 CHAIN | 1601051 / 181608 |
| EUHU3535 | TYPE CU GUIDE ASSEMBLY FOR ANSI #35 CHAIN | 1601061 / 181606 |
| EUHU3540 | TYPE CU GUIDE ASSEMBLY FOR ANSI #40 CHAIN | 1601062 / 181606 |
| EUHU3550 | TYPE CU GUIDE ASSEMBLY FOR ANSI #50 CHAIN | 1601063 / 181607 |
| EUHU3560 | TYPE CU GUIDE ASSEMBLY FOR ANSI #60 CHAIN | 1601064 / 181607 |
| EUHU3580 | TYPE CU GUIDE ASSEMBLY FOR ANSI #80 CHAIN | 1601065 / 181607 |
| EUHU3635 | TYPE CK GUIDE ASSEMBLY FOR ANSI #35 CHAIN | 1601081 / 181606 |
| EUHU3640 | TYPE CK GUIDE ASSEMBLY FOR ANSI #40 CHAIN | 1601082 / 181607 |
| EUHU3650 | TYPE CK GUIDE ASSEMBLY FOR ANSI #50 CHAIN | 1601083 / 181608 |
| EUHU3660 | TYPE CK GUIDE ASSEMBLY FOR ANSI #60 CHAIN | 1601084 / 181608 |
| EUHU3680 | TYPE CK GUIDE ASSEMBLY FOR ANSI #80 CHAIN | 1601085 / 181608 |
| EUHU3735 | TYPE CKG GUIDE ASSEMBLY FOR ANSI # 35 CHAIN | 1601052 / 181609 |
| EUHU3740 | TYPE CKG GUIDE ASSEMBLY FOR ANSI # 40CHAIN | 1601053 / 181609 |
| EUHU3750 | TYPE CKG GUIDE ASSEMBLY FOR ANSI # 50 CHAIN | 1601054 / 181609 |
| FUHC1803 | UHMW 2 PIECE CURVE WEARSTRIP 881T,880T CHAIN 18" CLR | 150106 |
| FUHC1806 | UHMW 2 PIECE CURVE WEARSTRIP 1873T,1874T CHAIN 18" CLR | 150111 |
| FUHC1813 | UHMW 2 PIECE CURVE WEARSTRIP 880,881 CHAIN 18' CLR | 150101 |
| FUHC2403 | UHMW 2 PIECE CURVE WEARSTRIP 881T,880T CHAIN 24" CLR | 150107 |
| FUHC2405 | UHMW 2 PIECE CURVE WEARSTRIP 882T CHAIN 24" CLR | 150109 |
| FUHC2406 | UHMW 2 PIECE CURVE WEARSTRIP 1873T,1874T CHAIN 24" CLR | 150112 |
| FUHC2413 | UHMW 2 PIECE CURVE WEARSTRIP 880,881 CHAIN 24" CLR | 150102 |
| FUHC2415 | UHMW 2 PIECE CURVE WEARSTRIP 882 CHAIN 24" CLR | 150104 |
| FUHC3003 | UHMW 2 PIECE CURVE WEARSTRIP 881T,880T CHAIN 30" CLR | 150108 |
| FUHC3005 | UHMW 2 PIECE CURVE WEARSTRIP 882T CHAIN 30" CLR | 150110 |
| FUHC3006 | UHMW 2 PIECE CURVE WEARSTRIP TAB 1873T,1874T CHAIN 30"CLR | 150113 |
| FUHC3013 | UHMW 2 PIECE CURVE WEARSTRIP 880,881 CHAIN 30" CLR | 150103 |
| FUHC3015 | UHMW 2 PIECE CURVE WEARSTRIP 882 CHAIN 30" CLR | 150105 |
| FUHS1112 | UHMW STRAIGHT FOR 880T,881T,879T CHAIN 4" X 1" K325 | 280101 |
| FUHS1113 | UHMW CURVE FOR 880T,881T & 879T CHAIN 4" X 1" K325 18" CLR | 27010118 |
| FUHS1113 | UHMW CURVE FOR 880T,881T & 879T CHAIN 4" X 1" K325 24" CLR | 27010124 |
| FUHS1113 | UHMW CURVE FOR 880T,881T & 879T CHAIN 4" X 1" K325 30"CLR | 27010130 |
| FUHS1132 | UHMW STRAIGHT FOR 1873T CHAIN 4" X 1 3/8" K325 | 280107 |
| FUHS1133 | UHMW CURVE FOR 1873T CHAIN 4" X 1 3/8" K325 18"CLR | 27010718 |
| FUHS1133 | UHMW CURVE FOR 1873T CHAIN 4" X 1 3/8" K325 24"CLR | 27010724 |
| FUHS1133 | UHMW CURVE FOR 1873T CHAIN 4" X 1 3/8" K325 24"CLR | 27010730 |
| FUHS1212 | UHMW STRAIGHT FOR 880T,881T,879T CHAIN 5" X 1" K450 | 280102 |
| FUHS1213 | UHMW CURVE FOR 880T, 881T & 879T CHAIN 5" X 1" K450 24" CLR | 27010224 |
| FUHS1213 | UHMW CURVE FOR 880T, 881T & 879T CHAIN 5" X 1" K450 30" CLR | 27010230 |
| FUHS1213 | UHMW CURVE FOR 880T, 881T & 879T CHAIN 5" X 1" K450 36" CLR | 27010236 |
| FUHS1222 | UHMW STRAIGHT FOR 882T CHAIN 5" X 1 3/8" K450 | 280103 |
| FUHS1223 | UHMW CURVE FOR 882T CHAIN 5" X 1 1/4" K450 24" CLR | 27011424 |
| FUHS1223 | UHMW CURVE FOR 882T CHAIN 5" X 1 1/4" K450 30" CLR | 27010130 |
| FUHS1223 | UHMW CURVE FOR 882T CHAIN 5" X 1 1/4" K450 36" CLR | 27011436 |
| FUHS1232 | UHMW STRAIGHT FOR 1873T CHAIN 5" X 1 3/8" K450 | 280108 |
| FUHS1233 | UHMW CURVE FOR 1873T CHAIN 5" X 1 3/8" K450 18"CLR | 27010818 |
| FUHS1233 | UHMW CURVE FOR 1873T CHAIN 5" X 1 3/8" K450 24"CLR | 27010824 |
| FUHS1233 | UHMW CURVE FOR 1873T CHAIN 5" X 1 3/8" K450 30"CLR | 27010830 |
| FUHS1332 | UHMW STRAIGHT FOR 1873T CHAIN 6 1/2" X 1 3/8" K600 | 280109 |
| FUHS1333 | UHMW CURVE FOR 1873T CHAIN 6 1/2" X 1 3/8" K600 18"CLR | 27010918 |
| FUHS1333 | UHMW CURVE FOR 1873T CHAIN 6 1/2" X 1 3/8" K600 24' CLR | 27010924 |
| FUHS1333 | UHMW CURVE FOR 1873T CHAIN 6 1/2" X 1 3/8" K600 30"CLR | 27010930 |
| FUHS1422 | UHMW STRAIGHT FOR 882T CHAIN 8" X 1 3/8" K750 | 280104 |
| FUHS1423 | UHMW CURVE FOR 882T CHAIN 8" X 1 1/4" K750 24" CLR | 27011524 |
| FUHS1423 | UHMW CURVE FOR 882T CHAIN 8" X 1 1/4" K750 30" CLR | 27011530 |
| FUHS1423 | UHMW CURVE FOR 882T CHAIN 8" X 1 1/4" K750 36" CLR | 27011536 |
| FUHS1432 | UHMW STRAIGHT FOR 1873T CHAIN 8" X 1 3/8" K750 | 280110 |
| FUHS1433 | UHMW CURVE FOR 1873T CHAIN 8" X 1 3/8" K750 18"CLR | 27011018 |
| FUHS1433 | UHMW CURVE FOR 1873T CHAIN 8" X 1 3/8" K750 24"CLR | 27011024 |
| FUHS1433 | UHMW CURVE FOR 1873T CHAIN 8" X 1 3/8" K750 30"CLR | 27011030 |
| FUHS1522 | UHMW STRAIGHT FOR 882T CHAIN 10 1/2" X 1 3/8" K100 | 280105 |
| FUHS1532 | UHMW STRAIGHT FOR 1873T CHAIN 10 1/2" X 1 3/8" K100 | 280111 |
| FUHS1533 | UHMW CURVE FOR 1873T CHAIN 10 1/2" X 1 3/8 K100 18"CLR | 27011118 |
| FUHS1533 | UHMW CURVE FOR 1873T CHAIN 10 1/2" X 1 3/8 K100 24"CLR | 27011124 |
| FUHS1533 | UHMW CURVE FOR 1873T CHAIN 10 1/2" X 1 3/8 K100 30"CLR | 27011139 |
| FUHS1622 | UHMW STRAIGHT FOR 882T CHAIN 12" 1/2" X 1 3/8" K120 | 280106 |
| FUHS1623 | UHMW CURVE FOR 882T CHAIN 12 1/2" X 1 1/4" K120 24" CLR | 27011724 |
| FUHS1623 | UHMW CURVE FOR 882T CHAIN 12 1/2" X 1 1/4" K120 30" CLR | 27011730 |
| FUHS1623 | UHMW CURVE FOR 882T CHAIN 12 1/2" X 1 1/4" K120 36" CLR | 27011736 |
| FUHS1632 | UHMW STRAIGHT FOR 1873T CHAIN 12 1/2" 1 3/8" K120 | 280112 |
| FUHS1633 | UHMW CURVE FOR 1873T CHAIN 12 1/2" X 1 3/8 K120 18"CLR | 27011218 |
| FUHS1633 | UHMW CURVE FOR 1873T CHAIN 12 1/2" X 1 3/8 K120 24"CLR | 27011224 |
| FUHS1633 | UHMW CURVE FOR 1873T CHAIN 12 1/2" X 1 3/8 K120 30"CLR | 27011230 |
| SATL2500 | ACETAL CHAIN #25 | 89052500 |
| SATL3500 | ACETAL CHAIN #35 | 89053500 |
| SATL4000 | ACETAL CHAIN #40 | 89054000 |
| SNML2500 | NYLATRON CHAIN #25 | 89082500 |
| SNML3500 | NYLATRON CHAIN #35 | 89083500 |
| SNML4000 | NYLATRON CHAIN #40 | 89084000 |
| SPPL2500 | POLYPROPYLENE CHAIN #25 | 89592500 |
| SPPL3500 | POLYPROPYLENE CHAIN #35 | 89593500 |
| SPPL4000 | POLYPROPYLENE CHAIN #40 | 89594000 |

## Pillow Blocks

| Wood | UHMW | OF/ UHMW | Shaft Size | A | B | C | E | F | G | H | J | K |
|---|---|---|---|---|---|---|---|---|---|---|---|---|
| 130401 | 130101 | 130301 | 1/2 | 1-3/16 | 1-7/8 | 1-1/2 | 3-3/8 | 4-3/4 | 5/8 | 3/4 | 7/16 | 7/8 |
| 130402 | 130102 | 130302 | 5/8 | 1-3/16 | 1-7/8 | 1-1/2 | 3-3/8 | 4-3/4 | 5/8 | 3/4 | 7/16 | 7/8 |
| 130403 | 130103 | 130303 | 3/4 | 1-5/16 | 2-1/4 | 1-1/2 | 3-3/4 | 5-1/4 | 5/8 | 3/4 | 7/16 | 15/16 |
| 130407 | 130107 | 130307 | 1 | 1-7/16 | 2-1/2 | 1-1/2 | 4 | 5-1/2 | 3/4 | 3/4 | 7/16 | 15/16 |
| 130409 | 130109 | 130309 | 1-1/8 | 1-11/16 | 2-3/4 | 1-1/2 | 4-3/4 | 6-1/4 | 7/8 | 3/4 | 9/16 | 1-1/16 |
| 130411 | 130111 | 130311 | 1-1/4 | 1-7/8 | 3-1/4 | 1-3/4 | 5 | 6-1/2 | 7/8 | 7/8 | 9/16 | 1-1/16 |
| 130414 | 130114 | 130314 | 1-1/2 | 2 | 3-1/4 | 1-3/4 | 5-3/8 | 7 | 7/8 | 7/8 | 9/16 | 1-1/16 |
| 130415 | 130115 | 130315 | 1-3/4 | 2-1/8 | 3-3/4 | 2 | 5-3/4 | 7-1/2 | 7/8 | 1 | 9/16 | 1-1/16 |
| 130417 | 130117 | 130317 | 2 | 2-1/2 | 4-1/2 | 2 | 6-3/4 | 8-3/4 | 1 | 1 | 11/16 | 1-5/16 |
| 130419 | 130119 | 130319 | 2-1/4 | 2-3/4 | 4-3/4 | 2-1/2 | 7-1/2 | 9-1/2 | 1 | 1-1/4 | 11/16 | 1-5/16 |

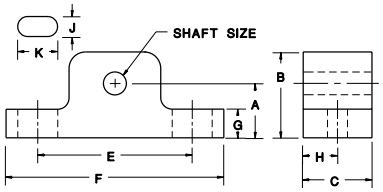


## Split Pillow Blocks

| Wood | UHMW | OF/ UHMW | Shaft Size | A | B | C | D | E | G | H |
|---|---|---|---|---|---|---|---|---|---|---|
| 130422 | 130122 | 130322 | 1/2 | 2-3/16 | 1-3/16 | 1 | 3-3/8 | 4-3/4 | 1-1/2 | 7/16 |
| 130423 | 130123 | 130323 | 5/8 | 2-3/16 | 1-3/16 | 1 | 3-3/8 | 4-3/4 | 1-1/2 | 7/16 |
| 130424 | 130124 | 130324 | 3/4 | 2-1/2 | 1-5/16 | 1-3/16 | 3-3/4 | 5-1/4 | 1-1/2 | 7/16 |
| 130427 | 130127 | 130327 | 1 | 2-3/4 | 1-7/16 | 1-5/16 | 4 | 5-1/2 | 1-1/2 | 7/16 |
| 130431 | 130131 | 130331 | 1-1/4 | 3-5/8 | 1-7/8 | 1-3/4 | 5 | 6-1/2 | 1-3/4 | 9/16 |
| 130433 | 130133 | 130333 | 1-1/2 | 4 | 2 | 2 | 5-3/8 | 7 | 1-3/4 | 9/16 |
| 130434 | 130134 | 130334 | 1-3/4 | 4-1/4 | 2-1/8 | 2-1/8 | 5-3/4 | 7-1/2 | 2 | 9/16 |
| 130436 | 130136 | 130336 | 2-1/2 | 4 | 2-1/4 | 1-3/4 | 3-1/4 | 4-1/2 | 1-3/4 | 9/16 |
| 130437 | 130137 | 130337 | 3 | 4-1/2 | 2-1/4 | 2-1/4 | 3-3/4 | 5 | 1-3/4 | 9/16 |

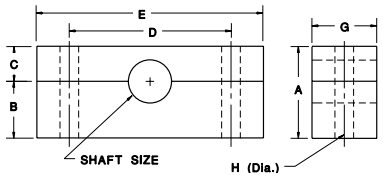


## 2-Bolt Flange Blocks

| Wood | UHMW | OF/UHMW | Shaft Size | A | B | C | D | E |
|---|---|---|---|---|---|---|---|---|
| 130438 | 130138 | 130338 | 1/2 | 3-7/8 | 3 | 2-1/8 | 1-1/4 | 7/16 |
| 130439 | 130139 | 130339 | 3/4 | 4-7/16 | 3-9/16 | 2-1/2 | 1-1/2 | 7/16 |
| 130440 | 130140 | 130340 | 1 | 4-15/16 | 3-7/8 | 2-3/4 | 1-1/2 | 7/16 |
| 130442 | 130142 | 130342 | 1-1/4 | 6-1/8 | 5-1/8 | 3-5/8 | 1-3/4 | 9/16 |
| 130444 | 130144 | 130344 | 1-1/2 | 6-13/16 | 5-5/8 | 4 | 2 | 9/16 |

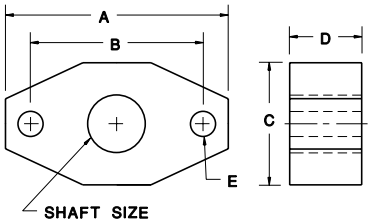


## 4-Bolt Flange Blocks

| Wood | UHMW | OF/UHMW | Shaft Size | A | B | C | D | E |
|---|---|---|---|---|---|---|---|---|
| 130445 | 130145 | 130345 | 1/2 | 3 | 1-1/2 | 2-1/8 | 1 | 7/16 |
| 130446 | 130146 | 130346 | 3/4 | 3-3/8 | 1-11/16 | 2-1/2 | 1-1/4 | 7/16 |
| 130447 | 130147 | 130347 | 1 | 3-3/4 | 1-7/8 | 2-3/4 | 1-1/4 | 7/16 |
| 130449 | 130149 | 130349 | 1-1/4 | 4-3/4 | 2-1/8 | 3-5/8 | 1-1/2 | 9/16 |
| 130451 | 130151 | 130351 | 1-1/2 | 5-1/8 | 2-9/16 | 4 | 1-3/4 | 9/16 |
| 130453 | 130153 | 130353 | 2 | 6-3/8 | 3-3/16 | 5-1/8 | 1-3/4 | 9/16 |

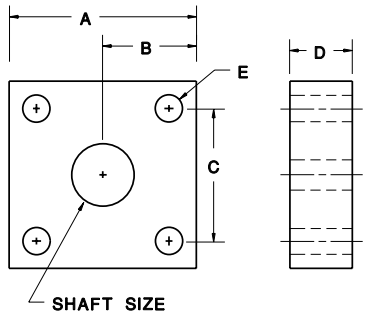

## Pillow Blocks

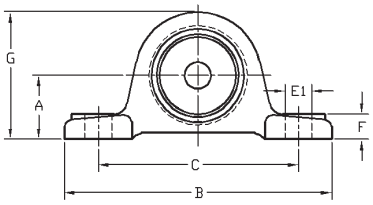


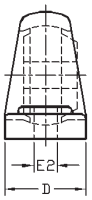


| Size | Shaft (inches) | Shaft (mm) | A | B | C | D | E1 | E2 | F | G |
|---|---|---|---|---|---|---|---|---|---|---|
| P204-12 | 3/4 | | 1-5/16 | 5 | 3-3/4 | 1-1/2 | 1/2 | 7/16 | 1/2 | 2-17/32 |
| P204 | | 20 | 33.3 | 127 | 95 | 38 | 14 | 11 | 13 | 64 |
| P205-14 | 7/8 | | | | | | | | | |
| P205-15 | 15/16 | | 1-7/16 | 5-1/2 | 4-1/8 | 1-1/2 | 1/2 | 7/16 | 1/2 | 2-25/32 |
| P205 | | 25 | 36.5 | 140 | 105 | 38 | 14 | 11 | 13 | 71 |
| P205-16 | 1 | | | | | | | | | |
| P206-17 | 1-1/16 | | | | | | | | | |
| P206-18 | 1-1/8 | | 1-11/16 | 6-1/2 | 4-3/4 | 1-7/8 | 23/32 | 1/2 | 19/32 | 3-5/16 |
| P206 | | 30 | 42.9 | 165 | 121 | 48 | 18 | 14 | 12 | 84 |
| P206-19 | 1-3/16 | | | | | | | | | |
| P206-20 | 1-1/4 | | | | | | | | | |
| P207-20 | 1-1/4 | | | | | | | | | |
| P207-21 | 1-5/16 | | | | | | | | | |
| P207-22 | 1-3/8 | | 1-7/8 | 6-9/16 | 5 | 1-7/8 | 23/32 | 1/2 | 5/8 | 3-21/32 |
| P207 | | 35 | 47.6 | 167 | 127 | 48 | 18 | 14 | 16 | 93 |
| P207-23 | 1-7/16 | | | | | | | | | |
| P208-24 | 1-1/2 | | | | | | | | | |
| P208-25 | 1-9/16 | | 1-15/16 | 7-1/4 | 5-13/32 | 2-1/8 | 23/32 | 1/2 | 21/32 | 3-27/32 |
| P208 | | 40 | 49.2 | 184 | 137 | 54 | 18 | 14 | 17 | 98 |

## Two-Bolt Flange

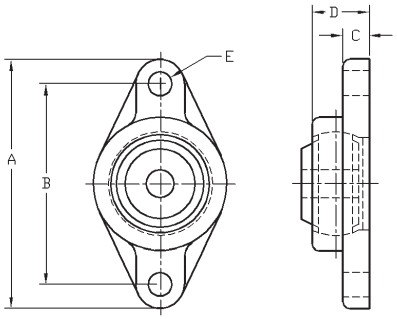


| Size | Shaft (inches) | Shaft (mm) | A | B | C | D | E |
|---|---|---|---|---|---|---|---|
| FL204-12 | 3/4 | | 4-7/16 | 3-35/64 | 7/16 | 1 | 7/16 |
| FL204 | | 20 | 113 | 90 | 11 | 25.5 | 11 |
| FL205-14 | 7/8 | | | | | | |
| FL205-15 | 15/16 | | 5-1/8 | 3-57/64 | 1/2 | 1-1/16 | 7/16 |
| FL205 | | 25 | 130 | 99 | 13 | 27 | 11 |
| FL205-16 | 1 | | | | | | |
| FL206-17 | 1-1/16 | | | | | | |
| FL206-18 | 1-1/8 | | 5-13/16 | 4-39/64 | 1/2 | 1-7/32 | 7/16 |
| FL206 | | 30 | 148 | 117 | 12 | 31 | 11 |
| FL206-19 | 1-3/16 | | | | | | |
| FL206-20 | 1-1/4 | | | | | | |
| FL207-20 | 1-1/4 | | | | | | |
| FL207-21 | 1-5/16 | | | | | | |
| FL207-22 | 1-3/8 | | 6-11/32 | 5-1/8 | 9/16 | 1-11/32 | 33/64 |
| FL207 | | 35 | 161 | 130 | 14 | 34 | 13 |
| FL207-23 | 1-7/16 | | | | | | |
| FL208-24 | 1-1/2 | | | | | | |
| FL208-25 | 1-9/16 | | 6-7/8 | 5-43/64 | 9/16 | 1-13/32 | 1/2 |
| FL208 | | 40 | 175 | 144 | 14 | 36 | 14 |

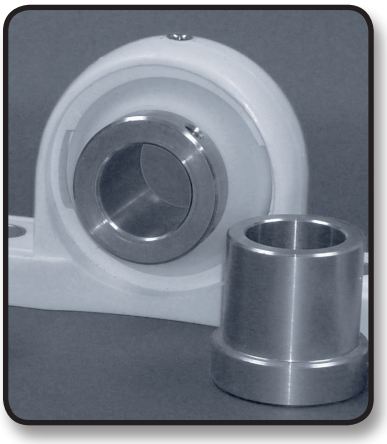

## Configurations Available

- Plastic bearing inserts
- Stainless steel sleeves available for shaft protection or positive locking
- Call for price and availability

## Three-Bolt Flange

| Size | Shaft (inches) | Shaft (mm) | A | B | C | D | E | F | G | H | I |
|---|---|---|---|---|---|---|---|---|---|---|---|
| FLT204-12 | 3/4 | | 4-11/32 | 2-7/16 | 2-1/16 | 2-1/16 | 15/16 | 3/8 | 1/2 | 1-21/32 | 1-1/16 |
| FLT204 | | 20 | 110 | 62 | 52 | 52 | 24 | 9.5 | 12 | 42 | 27 |
| FLT205-14 | 7/8 | | | | | | | | | | |
| FLT205-15 | 15/16 | | 4-9/16 | 2-11/16 | 2-1/16 | 2-7/32 | 1-1/32 | 3/8 | 1/2 | 1-49/64 | 1-1/16 |
| FLT205 | | 25 | 116 | 68 | 52 | 56 | 26 | 9.5 | 13 | 45 | 27 |
| FLT205-16 | 1 | | | | | | | | | | |
| FLT206-17 | 1-1/16 | | | | | | | | | | |
| FLT206-18 | 1-1/8 | | 5-1/8 | 3-1/16 | 2-5/32 | 2-9/16 | 1-5/32 | 3/8 | 1/2 | 1-31/32 | 1-9/64 |
| FLT206 | | 30 | 130 | 78 | 55 | 65 | 29 | 9.5 | 13 | 50 | 29 |
| FLT206-19 | 1-3/16 | | | | | | | | | | |
| FLT206-20 | 1-1/4 | | | | | | | | | | |
| FLT207-20 | 1-1/4 | | | | | | | | | | |
| FLT207-21 | 1-5/16 | | | | | | | | | | |
| FLT207-22 | 1-3/8 | | 5-21/32 | 3-17/32 | 2-7/16 | 2-3/4 | 1-5/16 | 3/8 | 19/32 | 2 -11/64 | 1-17/64 |
| FLT207 | | 35 | 144 | 90 | 62 | 70 | 33 | 9.5 | 15 | 55 | 32 |
| FLT207-23 | 1-7/16 | | | | | | | | | | |
| FLT208-24 | 1-1/2 | | | | | | | | | | |
| FLT208-25 | 1-9/16 | | 6-15/32 | 3-15/16 | 2-27/32 | 3-1/16 | 1-11/32 | 7/16 | 5/8 | 2-23/64 | 1-39/64 |
| FLT208 | | 40 | 164 | 100 | 72 | 78 | 34 | 11.1 | 16 | 60 | 41 |

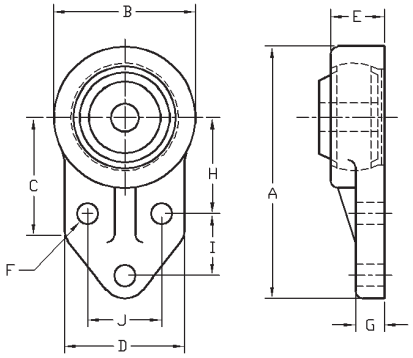


## Four-Bolt Flange

| Size | Shaft (inches) | Shaft (mm) | A | B | C | D | E |
|---|---|---|---|---|---|---|---|
| F204-12 | 3/4 | | 3-3/8 | 2-33/64 | 15/32 | 1 | 7/16 |
| F204 | | 20 | 86 | 64 | 12 | 25.5 | 11 |
| F205-14 | 7/8 | | | | | | |
| F205-15 | 15/16 | | 3-3/4 | 2-3/4 | 9/16 | 1-1/16 | 7/16 |
| F205 | | 25 | 95 | 70 | 14 | 27 | 11 |
| F205-16 | 1 | | | | | | |
| F206-17 | 1-1/16 | | | | | | |
| F206-18 | 1-1/8 | | 4-1/4 | 3-17/64 | 9/16 | 1-7/32 | 7/16 |
| F206 | | 30 | 108 | 83 | 14 | 31 | 11 |
| F206-19 | 1-3/16 | | | | | | |
| F206-20 | 1-1/4 | | | | | | |
| F207-20 | 1-1/4 | | | | | | |
| F207-21 | 1-5/16 | | | | | | |
| F207-22 | 1-3/8 | | 4-19/32 | 3-5/8 | 3/4 | 1-11/32 | 33/64 |
| F207 | | 35 | 117 | 92 | 19 | 34 | 13 |
| F207-23 | | | | | | | |
| F208-24 | 1-1/2 | | | | | | |
| F208-25 | 1-9/16 | | 5-1/8 | 4-1/64 | 5/8 | 1-13/32 | 1/2 |
| F208 | | 40 | 130 | 102 | 16 | 36 | 14 |

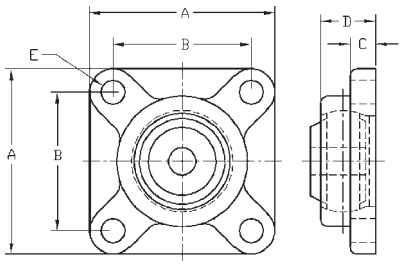


## Cast Housing Inserts

| UHMW | OF/UHMW | OF Nylon | Nylatron NSM | A in/mm | Series |
|---|---|---|---|---|---|
| 120175 | 120375 | 120975 | 123375 | 1.575 / 40 | -201 |
| 120176 | 120376 | 120976 | 123376 | 1.850 / 47 | -204 |
| 120177 | 120377 | 120977 | 123377 | 2.047 / 52 | -205 |
| 120178 | 120378 | 120978 | 123378 | 2.047 / 52 | -205 |
| 120179 | 120379 | 120979 | 123379 | 2.441 / 62 | -206 |
| 120180 | 120380 | 120980 | 123380 | 2.835 / 72 | -207 |
| 120181 | 120381 | 120981 | 123381 | 2.835 / 72 | -207 |
| 120182 | 120382 | 120982 | 123382 | 3.150 / 80 | -208 |

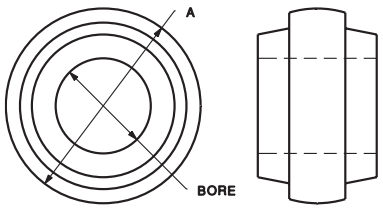


Note: *Please specify the desired bore size when ordering.*

## Two-Bolt Side Flange Mounts

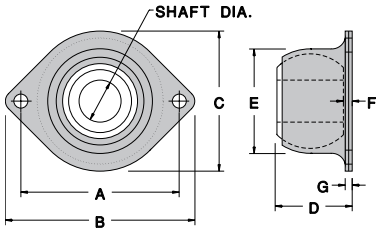


| Wood | UHMW | OF/ UHMW | Shaft Dia. | A | B | C | D | E | F | G | H | Sphere Dia. |
|---|---|---|---|---|---|---|---|---|---|---|---|---|
| *2404049 | 2401049 | 2403049 | 1/4 | 1-3/4 | 2-5/16 | 1-1/8 | 9/16 | 1 1/4 | 1/16 | 1/16 | 9/32" dia. | 1 |
| *2404051 | 2401051 | 2403051 | 3/8 | | | | | | | | | |
| *2404053 | 2401053 | 2403053 | 1/2 | | | | | | | | | |
| *2404055 | 2401055 | 2403055 | 5/8 | | | | | | | | | |
| *2404056 | 2401056 | 2403056 | 1/2 | 2-3/4 | 3-3/8 | 2-7/16 | 1-13/32 | 2 | 5/32 | 1/8 | 21/64" dia. | 1 11/16 |
| *2404058 | 2401058 | 2403058 | 5/8 | | | | | | | | | |
| *2404060 | 2401060 | 2403060 | 3/4 | | | | | | | | | |
| *2404062 | 2401062 | 2403062 | 7/8 | | | | | | | | | |
| *2404064 | 2401064 | 2403064 | 1 | | | | | | | | | |
| 2404065 | 2401065 | 2403065 | 3/4 | 3-9/32 | 4 | 2-3/4 | 1-9/16 | 2-3/8 | 1/16 | 9/64 | 25/64" dia. | 2 |
| 2404067 | 2401067 | 2403067 | 7/8 | | | | | | | | | |
| 2404069 | 2401069 | 2403069 | 1 | | | | | | | | | |
| 2404071 | 2401071 | 2403071 | 1-1/8 | | | | | | | | | |

* This Housing is available in Stainless Steel.

## Four-Bolt Side Flange Mounts

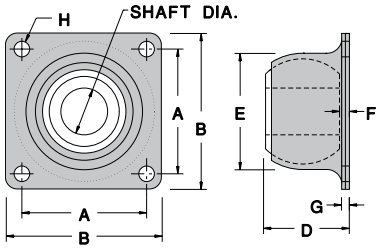


| Wood | UHMW | OF/ UHMW | Shaft Dia. | A | B | D | E | F | G | H | Sphere Dia. |
|---|---|---|---|---|---|---|---|---|---|---|---|
| 2404072 | 2401072 | 2403072 | 1/2 | 1-15/16 | 2-7/16 | 1-13/32 | 2 | 5/32 | 1/8 | 17/64" Dia. | 1-11/16 |
| 2404074 | 2401074 | 2403074 | 5/8 | | | | | | | | |
| 2404076 | 2401076 | 2403076 | 3/4 | | | | | | | | |
| 2404078 | 2401078 | 2403078 | 7/8 | | | | | | | | |
| 2404080 | 2401080 | 2403080 | 1 | | | | | | | | |
| 2404081 | 2401081 | 2403081 | 3/4 | 2-5/16 | 3 | 1-9/16 | 2-3/8 | 1/16 | 9/64 | 13/32" Dia. | 2 |
| 2404083 | 2401083 | 2403083 | 7/8 | | | | | | | | |
| 2404085 | 2401085 | 2403085 | 1 | | | | | | | | |
| 2404087 | 2401087 | 2403087 | 1 1/8 | | | | | | | | |
| *2404088 | 2401088 | 2403088 | 1 | 2-3/4 | 3-5/8 | 1-13/16 | 2-7/8 | 1/16 | 11/64 | 13/32" Dia. | 2 1/2 |
| *2404090 | 2401090 | 2403090 | 1 1/8 | | | | | | | | |
| *2404092 | 2401092 | 2403092 | 1 1/4 | | | | | | | | |
| *2404094 | 2401094 | 2403094 | 1 3/8 | | | | | | | | |
| *2404096 | 2401096 | 2403096 | 1 1/2 | | | | | | | | |

* This Housing is available in Stainless Steel. Center Flange Mounts are available upon request.

## Pillow Blocks, Metal Mounted

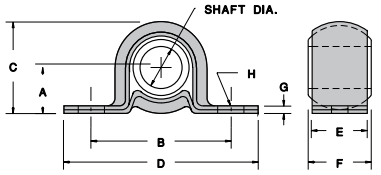


| Wood | UHMW | OF/ UHMW | Shaft Dia. | A | B | C | D | E | F | G | H | Sphere Dia. |
|---|---|---|---|---|---|---|---|---|---|---|---|---|
| 2404001 | 2401001 | 2403001 | 1/4 | 9/16 | 1-3/4 | 1-1/8 | 2-5/16 | 7/16 | 1/2 | 1/8 | 17/64 x 5/16 | 1 |
| 2404003 | 2401003 | 2403003 | 3/8 | | | | | | | | | |
| 2404005 | 2401005 | 2403005 | 1/2 | | | | | | | | | |
| 2404007 | 2401007 | 2403007 | 5/8 | | | | | | | | | |
| 2404008 | 2401008 | 2403008 | 1/2 | 29/32 | 2-7/8 | 1-3/4 | 3-15/16 | 1-1/8 | 1-1/4 | 1/8 | 21/64 x 21/32 | 1-11/16 |
| 2404010 | 2401010 | 2403010 | 5/8 | | | | | | | | | |
| 2404012 | 2401012 | 2403012 | 3/4 | | | | | | | | | |
| 2404016 | 2401016 | 2403016 | 1 | | | | | | | | | |
| *2404017 | 2401017 | 2403017 | 1/2 | 15/16 | 2-15/16 | 1-13/16 | 4-1/32 | 1-1/8 | 1-1/4 | 3/16 | 21/64 x 21/32 | 1-11/16 |
| *2404019 | 2401019 | 2403019 | 5/8 | | | | | | | | | |
| *2404021 | 2401021 | 2403021 | 3/4 | | | | | | | | | |
| *2404025 | 2401025 | 2403025 | 1 | | | | | | | | | |
| 2404026 | 2401026 | 2403026 | 3/4 | 1-1/16 | 3-1/4 | 2-1/16 | 4-9/16 | 1-5/16 | 1-1/2 | 1/8 | 25/64 x 5/8 | 2 |
| 2404030 | 2401030 | 2403030 | 1 | | | | | | | | | |
| *2404033 | 2401033 | 2403033 | 3/4 | 1-3/32 | 3-5/16 | 2-1/8 | 5-5/8 | 1-5/16 | 1-1/2 | 3/16 | 25/64 x 5/8 | 2 |
| *2404037 | 2401037 | 2403037 | 1 | | | | | | | | | |
| *2404040 | 2401040 | 2403040 | 1 | 1-11/32 | 3-7/8 | 2-11/16 | 5-3/8 | 1-7/16 | 1-3/4 | 7/32 | 25/64 x 25/32 | 2-1/2 |
| *2404044 | 2401044 | 2403044 | 1-1/4 | | | | | | | | | |
| *2404046 | 2401046 | 2403046 | 1-3/8 | | | | | | | | | |
| *2404048 | 2401048 | 2403048 | 1-1/2 | | | | | | | | | |

* This housing may be available In Stainless Steel. (minimums apply)

# Sleeve & Flange Bearings, Thrust Washers

Slideways Molded Bearings are available in a variety of sizes to fit many applications and operating environments. For special requirements, our machine shop efficiently produces custom sizes from any of these materials:

- UHMW
- OF/UHMW
- Teflon
- MD-Nylon
- PEEK
- PET
- Rulon®

Additional materials are listed on pages 4 and 5.

## Sleeve Bearings

| MD-Nylon | | | Nylon | | |
|---|---|---|---|---|---|
| ID | OD | Length | ID | OD | Length |
| 1/8 | 1/4 | 1/8 to 3/8 | 1/8 | 1/4 | 1/4 |
| 3/16 | 1/4 | 1/4 to 1/2 | 3/16 | 5/16 | 1/4 |
| 3/16 | 5/16 | 1/8 to 1/2 | 1/4 | 3/8 | 1/4 to 1/2 |
| 1/4 | 5/16 | 1/4 to 1/2 | 5/16 | 7/16 | 1/2 |
| 1/4 | 3/8 | 1/8 to 3/4 | 3/8 | 1/2 | 1/4 to 1/2 |
| 5/16 | 3/8 | 1/4 to 1/2 | 5/8 | 13/16 | 3/4 |
| 5/16 | 7/16 | 3/16 to 3/4 | 3/4 | 1 | 3/4 to 1 |
| 3/8 | 7/16 | 1/4 to 1/2 | 7/8 | 1-1/8 | 1 |
| 3/4 | 1/2 | 3/16 to 1 | 1 | 1-1/4 | 3/4 to 1 |
| 7/16 | 9/16 | 3/8 to 1/2 | 1-1/4 | 1-1/2 | 1 |
| 1/2 | 5/8 | 1/4 to 1/2 | 1-1/2 | 1-3/4 | 1 1/2 |

OTHER SIZES AND MATERIALS AVAILABLE

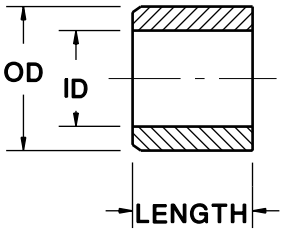


## Flange Bearings

| MD-Nylon | | | | | Nylon | | | | |
|---|---|---|---|---|---|---|---|---|---|
| ID | OD | Length | FD | FT | ID | OD | Length | FD | FT |
| 1/8 | 1/4 | 1/8 to 3/8 | .360 | .047 | 1/8 | 1/4 | 1/8 to 3/8 | .36 | .047 |
| 3/16 | 1/4 | 1/4 to 1/2 | .375 | .032 | 3/16 | 1/4 | 1/4 to 1/2 | .375 | .032 |
| 3/16 | 5/16 | 3/16 to 1/2 | .370 | .047 | 3/16 | 5/16 | 3/16 to 1/2 | .370 | .047 |
| 1/4 | 3/8 | 3/16 to 3/4 | .560 | .047 | 1/4 | 3/8 | 3/16 to 3/4 | .560 | .047 |
| 3/8 | 1/2 | 3/8 to 1 | .625 | .062 | 3/8 | 1/2 | 1/8 to 1 | .625 | .062 |
| 1/2 | 5/8 | 1 | .875 | .062 | 1/2 | 5/8 | 1 | .875 | .062 |
| 5/8 | 3/4 | 3/8 to 1 1/2 | 1 | .062 | 5/8 | 3/4 | 3/8 to 1 1/2 | 1 | .062 |
| 3/4 | 1 | 1/2 to 1 1/2 | 1.125 | .062 | 3/4 | 1 | 1/2 to 1 1/2 | 1.125 | .062 |
| 1 | 1-1/4 | 1/2 to 1 1/2 | 1.500 | .188 | 1 | 1-1/4 | 1/2 to 1 1/2 | 1.500 | .188 |

OTHER SIZES AND MATERIALS AVAILABLE

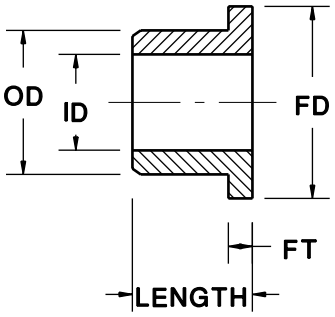


## Thrust Washers

Washers are precision machined or stamped and are available in any size and in all plastic materials. When ordering please specify ID, OD, and thickness needed.

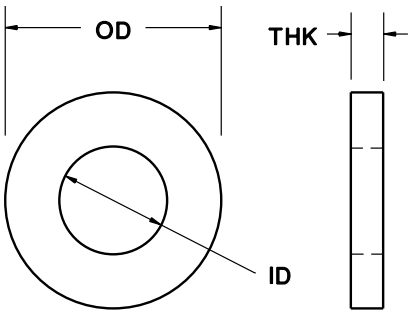

## Wastewater: Wear Strips

CHAMFERED WEARSTRIP

CHAMFERED STARTER STRIP

SQUARE FILLER STRIP

SQUARE STARTER STRIP

**Slideways** wastewater wear strips are made from reprocessed UHMW and use 1-3/8" washers.

### Wastewater Filler Wear Strips

| Part No. | Thickness | Width | Length | Centerline |
|---|---|---|---|---|
| SFWS05 | 3/8" | 2-5/8" | 120" | 1-5/16" |
| SFWS10 | 3/8" | 3" | 120" | 1-1/2" |
| SFWS15 | 1/2" | 2-1/2" | 120" | 1-1/4" |
| SFWS20 | 1/2" | 3" | 120" | 1-1/2" |
| SFWS22 | 1/2" | 3-1/2" | 120" | 1-3/4" |
| SFWS25 | 1/2" | 4" | 120" | 2" |
| SFWS30 | 1/2" | 5" | 120" | 2-1/2" |
| SFWS35 | 5/8" | 2-1/2" | 120" | 1-1/4" |
| SFWS40 | 5/8" | 3" | 120" | 1-1/2" |
| SFWS45 | 5/8" | 4" | 120" | 2" |
| SFWS50 | 5/8" | 5" | 120" | 2-1/2" |

### Wastewater Starter Wear Strips

| Part No. | Thickness | Width | Length | Centerline |
|---|---|---|---|---|
| SSWS05 | 3/8" | 2-5/8" | 120" | 1-5/16" |
| SSWS10 | 3/8" | 3" | 120" | 1-1/2" |
| SSWS15 | 1/2" | 2-1/2" | 120" | 1-1/4" |
| SSWS20 | 1/2" | 3" | 120" | 1-1/2" |
| SSWS22 | 1/2" | 3-1/2" | 120" | 1-3/4" |
| SSWS25 | 1/2" | 4" | 120" | 2" |
| SSWS30 | 1/2" | 5" | 120" | 2-1/2" |
| SSWS35 | 5/8" | 2-1/2" | 120" | 1-1/4" |
| SSWS40 | 5/8" | 3" | 120" | 1-1/2" |
| SSWS45 | 5/8" | 4" | 120" | 2" |
| SSWS50 | 5/8" | 5" | 120" | 2-1/2" |

### Washers *(sold in boxes of 100)*

| Part No. | Material | Diameter |
|---|---|---|
| SCSW | Carbon steel | 1-3/8" |
| SSWS | Stainless steel | 1-3/8" |

## Wastewater: Wearshoes

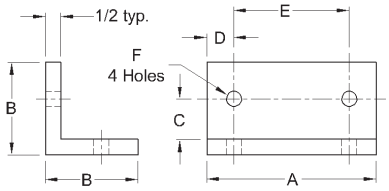


### Carrying Wearshoe

| Part Number | A | B | C | D | E | F |
|---|---|---|---|---|---|---|
| SCWS 0001 | 5-1/2" | 3" | 1-5/16" | 7/8" | 3-3/4" | 1/2" |
| SCWS 0550 | 5-1/2" | 3" | 1-3/8" | 7/8" | 3-3/4" | 1/2" |
| SCWS 0600 | 6" | 3" | 1-3/8" | 1-1/8" | 3-3/4" | 1/2" |

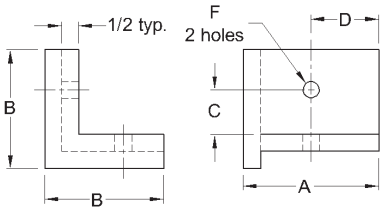


### Single-hole Return Wearshoe

| Part Number | A | B | C | D | E | F |
|---|---|---|---|---|---|---|
| SSHRW 001 | 4" | 3-1/2" | 1-5/16" | 2" | — | 1/2" |
| SSHRW 002 | 4" | 3-1/2" | 1-3/8" | 2" | — | 1/2" |
| SSHRW 003 | 4-1/2" | 3-1/2" | 1-3/8" | 2-1/4" | — | 1/2" |

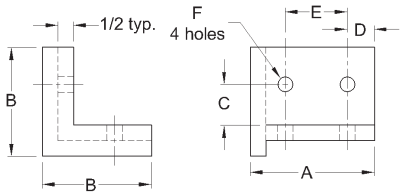


### Double-hole Return Wearshoe

| Part Number | A | B | C | D | E | F |
|---|---|---|---|---|---|---|
| SDHRW 0040 | 4" | 3-1/2" | 1-3/8" | 7/8" | 2" | 1/2" |
| SDHRW 0450 | 4-1/2" | 3-1/2" | 1-3/8" | 7/8" | 1" | 1/2" |
| SDHRW 0600 | 6" | 3-1/2" | 1-3/8" | 1-1/8" | 3-3/4" | 1/2" |

## Wastewater: Drag/Pintel Chain for Heavy-Duty Applications

Slideways Drag/Pintel chain is manufactured from reinforced nylon and features stainless steel pins. Drag/Pintel chain is designed for heavier duty applications and has the same advantages as standard plastic roller chain in harsh environments. Wastewater treatment is a common application for this chain.

Drag/Pintel chain is available in 16-D, 23-D, 26-D and NH78. Attachments are available for 23-D, 26-D, and NH78.

| | | |
|---|---|---|
| XX | 07 | Black Nylon |
| XX | 08 | Natural Nylon |

### Heavy-Duty Drag/Pintel Chain

| Chain Number | Pitch | Overall Width A | Max Spkt Face B | Side Bar Height C | Bushing Length D | Bushing Dia E | Pin Dia F | Weight Lb/Ft | Working Load Lb | Ext Pin Dia/In | Attach-ments Avail |
|---|---|---|---|---|---|---|---|---|---|---|---|
| EC-16D-XX | 1.630 | 2.25 | 0.62 | 0.85 | 1.37 | .62 | .31 | 0.64 | 920 | 5/16, 3/8, 1/2, 9/16 | None |
| EC-23D-XX | 2.308 | 2.37 | 0.69 | 1.00 | 1.39 | .81 | .37 | 0.76 | 1100 | 3/8, 7/16 | M43 |
| EC-26D-XX | 2.609 | 2.94 | 0.87 | 0.94 | 1.44 | .87 | .37 | 1.18 | 1740 | 7/16, 1/2, 9/16 | F2, K1 |
| EC-NH78-XX | 2.609 | 2.97 | 1.09 | 1.14 | 1.65 | .87 | .37 | 1.25 | 1740 | 7/16, 1/2, 9/16 | F2, K2 |

## Check Weighers:
## Plastic Roller Chain for Light-Duty Applications

Plastic chains have been developed for light-duty power transmission applications. They can be used with steel or plastic sprockets, and perform in a wide variety of speeds.

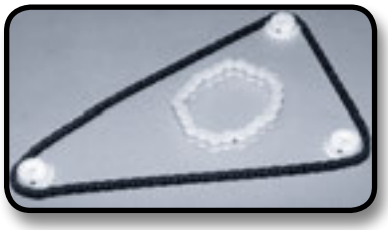

A real advantage of plastic roller chain is that it can perform in harsh chemicals, moisture, and various temperature applications. They self-lubricate and are ideal for applications where cleanliness is important. Food processing, medical and computer equipment and clean rooms are common uses for plastic roller chain.

Plastic roller chain is available in 1/4" pitch, 3/8" pitch and 1/2" pitch in your choice of Nylatron GS, Acetal, Polypropylene and Kynar PVDF.

| | | |
|---|---|---|
| XX | 05 | Acetal |
| XX | 08 | Nylatron GS |
| XX | 19 | Polypropylene |
| XX | KY | Kynar PVDF |

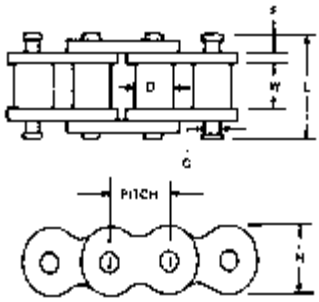


### Light-Duty Plastic Roller Chain

| | Pitch | W | D | C | F | L | H |
|---|---|---|---|---|---|---|---|
| LDC-25-XX | 1/4 | 1/8 | .130 | .105 | .040 | .349 | .25 |
| LDC-35-XX | 3/8 | 3/16 | .20 | .141 | .075 | .545 | .35 |
| LDC-40-XX | 1/2 | 5/16 | .312 | .156 | .088 | .725 | .46 |

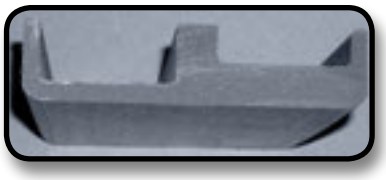

## Specialty Chain Guides For Bakery and Dairy Applications

Bakery and Dairy carton conveyors commonly use 3500 chain for moving cartons and pans. To accommodate this chain, a carry and return chain guide is often used. Chain guide is available in machined and extruded variations.

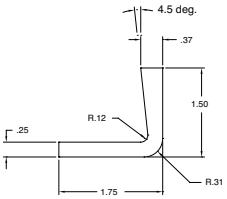


150315

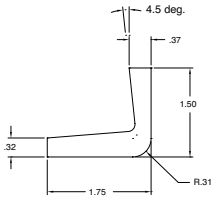


150316

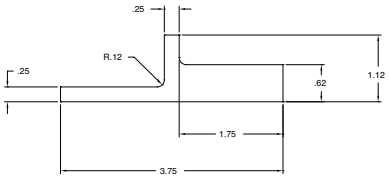


150317

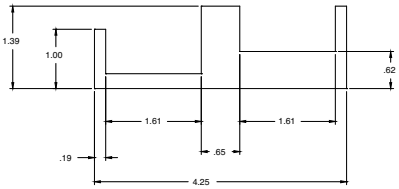


150318

*Guide rail used in a filling application*

## Filling Applications

Slideways produces many different products that are used in filling applications. Whether liquids, powders, tablets or other solids, Slideways can produce the components designed to fit your application.

*Manifold used for a tablet filling application*

*Star wheels for liquid and dry applications*

## Specialty Packaging Components

Slideways produces a wide variety of components for packaging applications. Our flexible manufacturing capabilities enable us to manufacture unique parts small and large volumes.

▲*These packaging lines include Slideways belt attachments, guide blocks and pin guides.*

◀*We produced just two of these parts, used to apply labels to small bottles in a dairy.*

## Poultry

Processing speeds in chicken slaughterhouses have increased dramatically over the last several years. Live chickens go in on one end and frozen chickens come out the other end ready to be cooked. Standard and custom plastic parts can be found in many areas of poultry processing plants. Chain guides are used in transporting the birds through many operations, such as deboning guides and guide blocks for wing cutters, which ensure a perfect cut each time and save time in processing labor. Plastic components are lighter, have better wear characteristics, and are FDA compliant.

*A poultry processing plant*

## Plastic Replaces Stainless Steel in Food Processing Applications

Plastic components offer many benefits to food processing applications and is often selected as a replacement material for stainless steel.

**Pump Rotors in Non-packaging Applications:** Ertalyte® components can be used to replace ones made from stainless steel for fluid handling in food and beverage plants. Ertalyte has the required mechanical strength and stiffness, has better wear resistance, and costs less than stainless steel.

**Tomato Sauce Canning:** A customer of ours used heavy stainless steel turnstiles that required an expensive lubrication system, which frequently contaminated the tomato sauce cans with grease. The lubrication system needed daily maintenance due to its constant operating temperature of 210°. These turnstiles were replaced with ones made from Nylatron GSM®, which is both strong and stable at this temperature. Eliminating the lubrication system and the lighter weight of the plastic reduced the drive system and generated significant cost savings. In addition, production increased due to reduced down time.

*SlideRail applications in food processing*

*Common plastic applications in food processing*

# Slideways Applications

## Extreme Temperature Applications

Modern plastics have a tremendous range of extreme temperature applications. Current engineered plastics can handle operating temperatures from cryogenic to 800°F. Many of today's plastics are capable of replacing metal materials.

## Corrosive Applications

**Slideways** components survive daily exposure to corrosive liquids. Our FDA accepted materials see constant washdown conditions in food processing applications. Our materials survive exposure to acids, alkalis and other harsh chemicals.

## Abrasive Environments

**Slideways** materials are often used in abrasive environments such as the sawmill shown here. Other common environments are glass bottling facilities and paper mills.

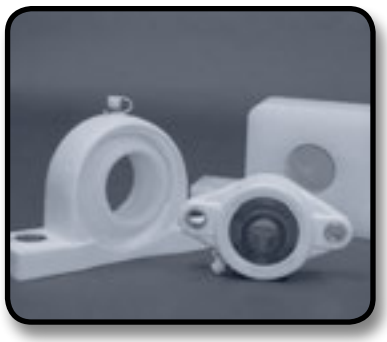

## Self-lubricating Requirements

**Slideways** products provide carefree, self-lubricating performance for applications where lubricants may contaminate or be washed away. Another advantage of the self-lubricating feature is the ability to provide lubrication where re-lubrication is difficult or in environments where lubrication may fail.

## Wear Reduction and More Economical Performance

**Slideways** plastic components reduce wear, weigh less and last longer than metallic parts. They are lighter and have a lower coefficient of friction, which reduces costly power consumption and extends mating component wear.

# Slideways Conveyor Component Products

Side Brackets and Knobs ..... 48

Clips, Clamps and Splices ..... 52

Adjusting Rods..... 53

Bead and Roller Guides ..... 54

Bead and Roller Transfer Modules ..... 57

Handles and Hinges ..... 58

Instrument Clamps, Cross Clamps, Cross Blocks ..... 59

Conveyor Support Components ..... 62

Expansion Plugs, Tube Ends, Stainless threaded bushings ..... 65

Plastic Base and Stainless Levelers..... 67

2 and 4 Bolt Flanges with Back Seals and Caps..... 74

| Material: |
|---|
| Support: PA |
| Knob: PA + nickel plated brass |
| Eyebolt: Stainless steel |

## Side bracket -small-

| Part # | ØA | B |
|---|---|---|
| **30101** | 1/2 | 0.35 |
| **30102** | 5/8 | 0.35 |
| **30103** | 1/2 | 0.41 |
| **30104** | 5/8 | 0.41 |

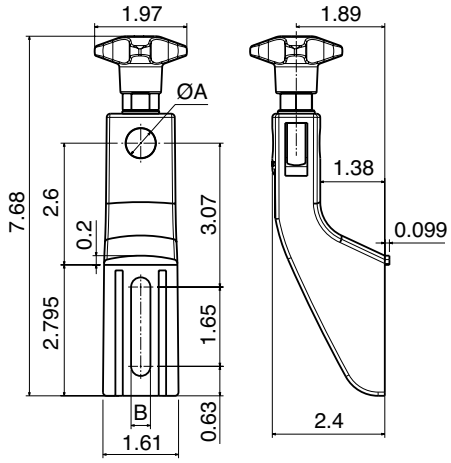

## Side bracket -medium-

| Part # | ØA | B |
|---|---|---|
| **30501** | 1/2 | 0.35 |
| **30502** | 5/8 | 0.35 |
| **30503** | 1/2 | 0.41 |
| **30504** | 5/8 | 0.41 |

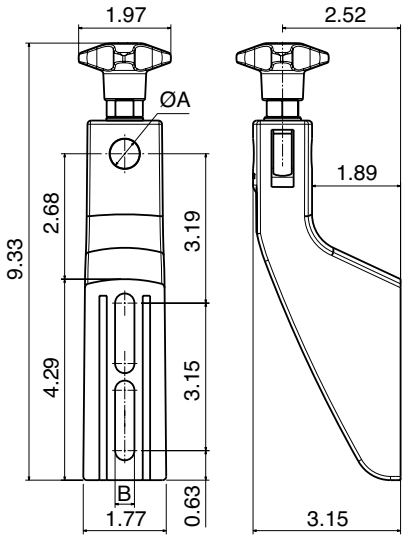


## Side bracket -large-

| Part # | ØA | B |
|---|---|---|
| **30901** | 1/2 | 0.35 |
| **30902** | 5/8 | 0.35 |
| **30903** | 1/2 | 0.41 |
| **30904** | 5/8 | 0.41 |

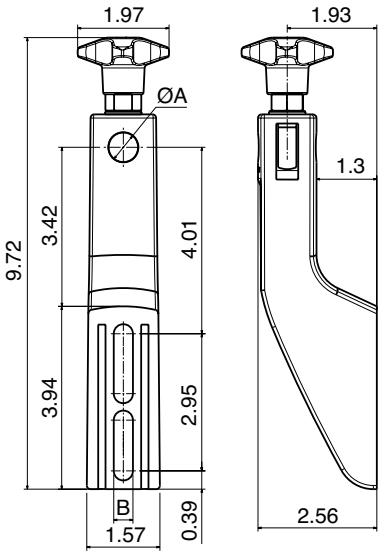


## Spacer for bracket -small-

| Part # |
|---|
| **32101** |

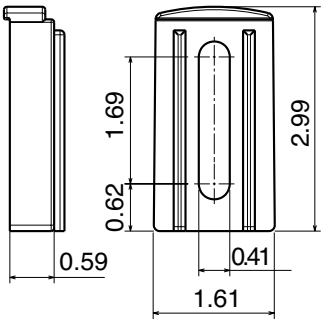


## Spacer for bracket -medium-

| Part # |
|---|
| **32201** |

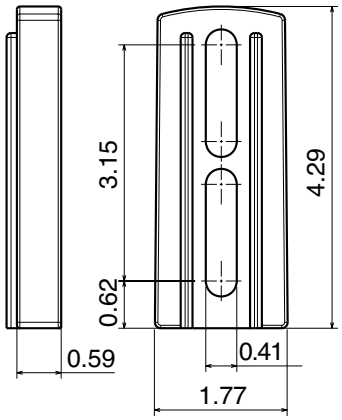


## Spacer for bracket -large-

| Part # |
|---|
| **32301** |

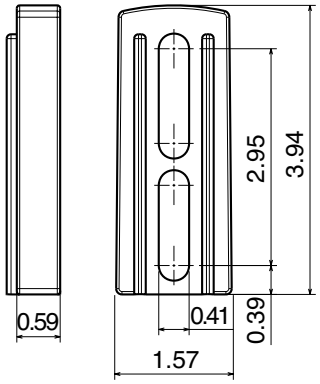

| Material: |
|---|
| Support: PA |
| Knob: PA + nickel plated brass |
| Eyebolt: Stainless steel |
| Heads: PA or stainless steel |
| Screw, washers and nut: Stainless steel |

## Side bracket -medium-, adjustable

| Part # | ØA | B |
|---|---|---|
| **30701** | 1/2 | 0.35 |
| **30702** | 5/8 | 0.35 |
| **30703** | 1/2 | 0.41 |
| **30704** | 5/8 | 0.41 |
| **30709** | bracket | 0.35 |
| **30710** | bracket | 0.41 |

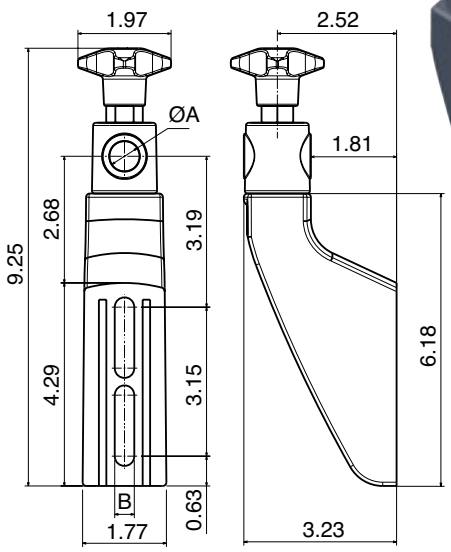

## Side bracket -medium-, adjustable SS

| Part # | ØA | B |
|---|---|---|
| **30801** | 1/2 | 0.35 |
| **30802** | 5/8 | 0.35 |
| **30803** | 1/2 | 0.41 |
| **30804** | 5/8 | 0.41 |

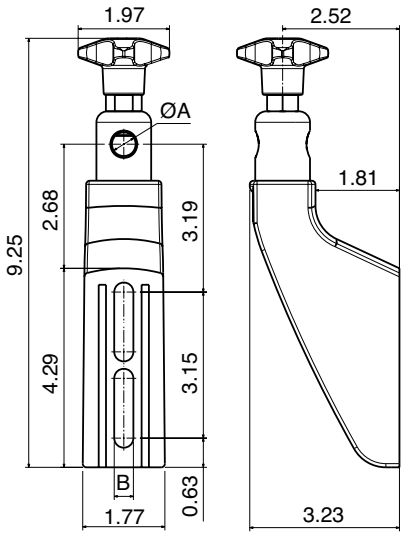

## Side bracket -large-, adjustable

| Part # | ØA | B |
|---|---|---|
| **31101** | 1/2 | 0.35 |
| **31102** | 5/8 | 0.35 |
| **31103** | 1/2 | 0.41 |
| **31104** | 5/8 | 0.41 |
| **31109** | bracket | 0.35 |
| **31110** | bracket | 0.41 |

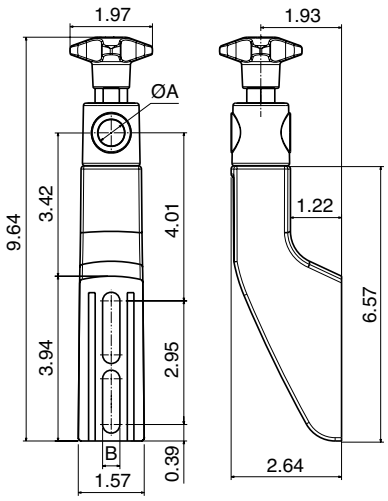

## Side bracket -large-, adjustable SS

| Part # | ØA | B |
|---|---|---|
| **31201** | 1/2 | 0.35 |
| **31202** | 5/8 | 0.35 |
| **31203** | 1/2 | 0.41 |
| **31204** | 5/8 | 0.41 |

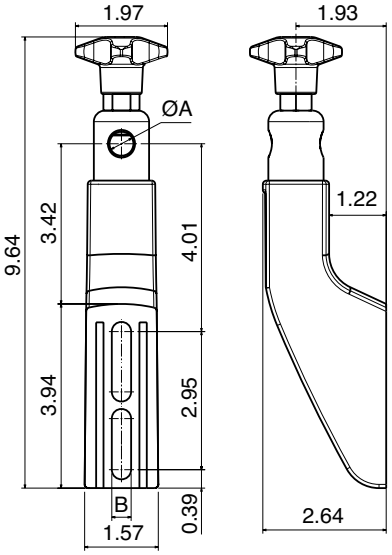

| Material: |
|---|
| Stainless steel AISI 304 |

## L-bracket

| Part # | Type |
|---|---|
| 31501 | A |
| 31502 | B |

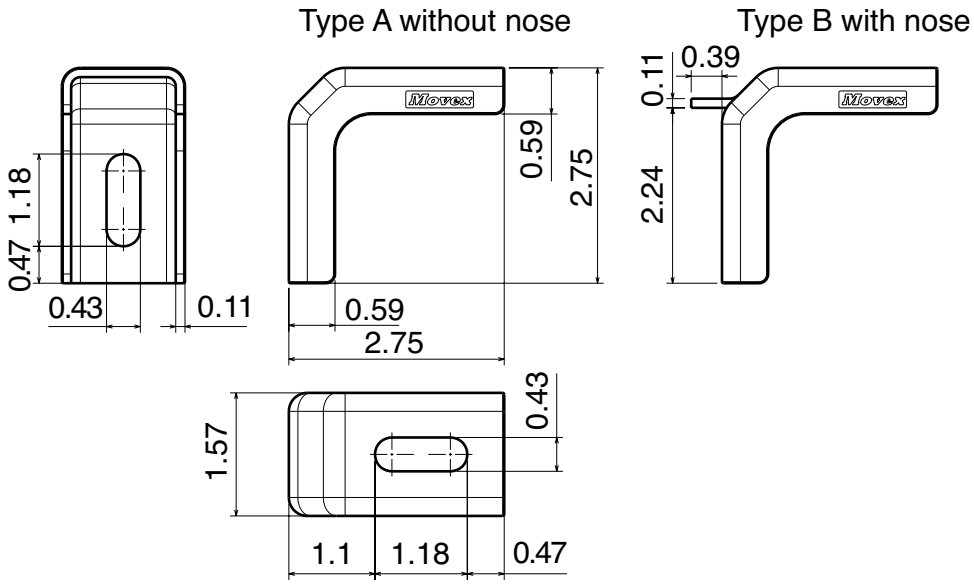


## L-bracket

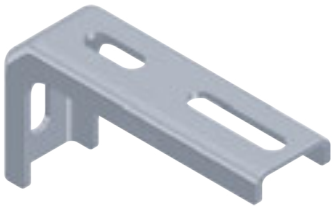

| Part # | Type |
|---|---|
| 31601 | A |
| 31602 | B |

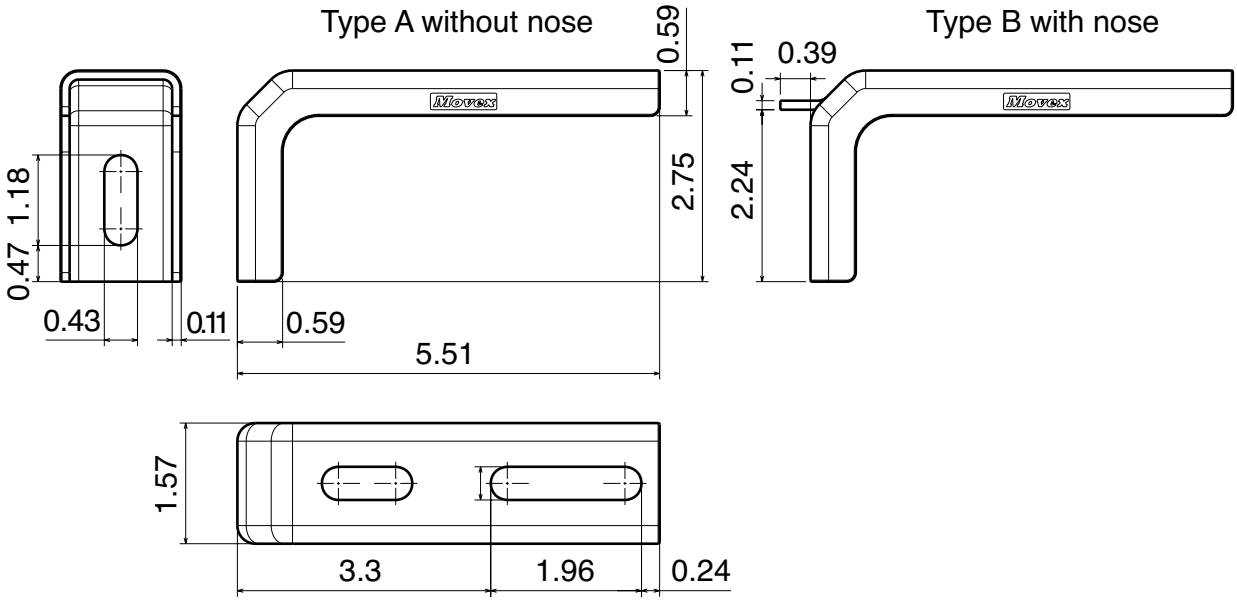

| Material: |
|---|
| Knob: PA + nickel plated brass |
| Eyebolt: Stainless steel |
| Heads: PA or stainless steel |
| Screw, washers and nut: Stainless steel |

## Adjustable head

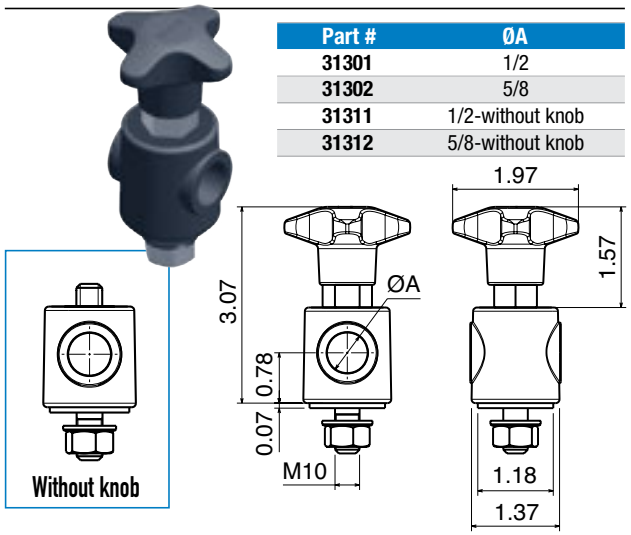


| Part # | ØA |
|---|---|
| 31301 | 1/2 |
| 31302 | 5/8 |
| 31311 | 1/2-without knob |
| 31312 | 5/8-without knob |

## Adjustable head, stainless steel

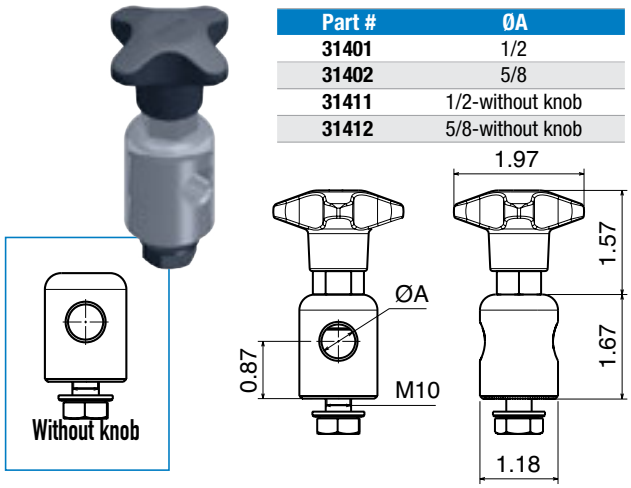


| Part # | ØA |
|---|---|
| 31401 | 1/2 |
| 31402 | 5/8 |
| 31411 | 1/2-without knob |
| 31412 | 5/8-without knob |

## Adjustable head, stainless steel

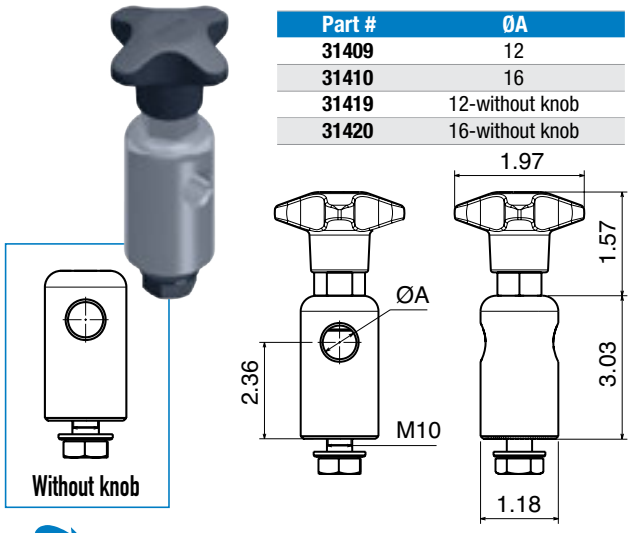


| Part # | ØA |
|---|---|
| 31409 | 12 |
| 31410 | 16 |
| 31419 | 12-without knob |
| 31420 | 16-without knob |

| Material: |
|---|
| Polyamide + nickel plated brass |

## Star knob

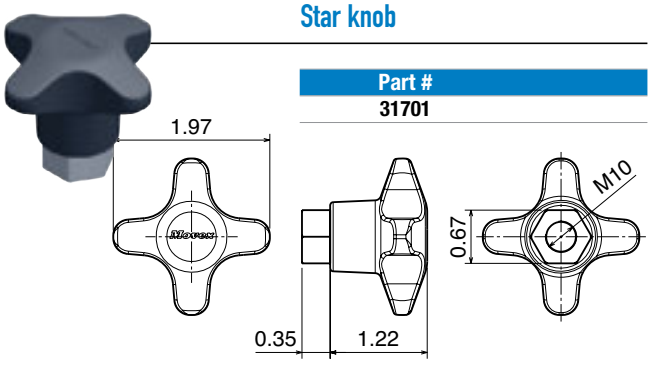


| Part # |
|---|
| 31701 |

## Star knob

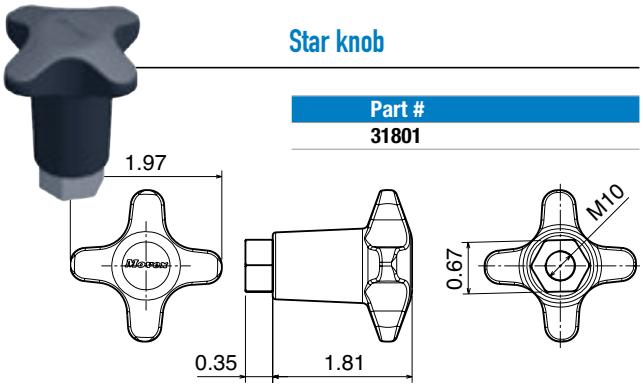


| Part # |
|---|
| 31801 |

## Star knob

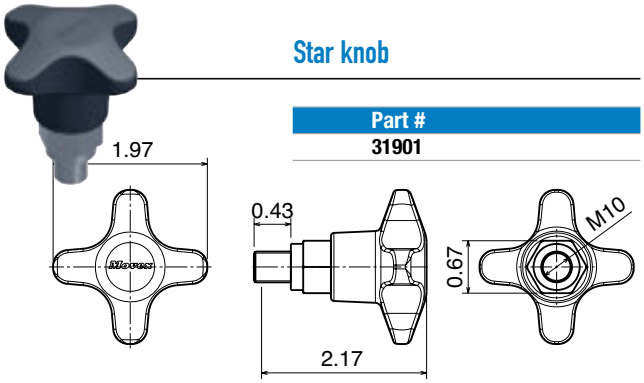


| Part # |
|---|
| 31901 |

## Star knob Ø3.15

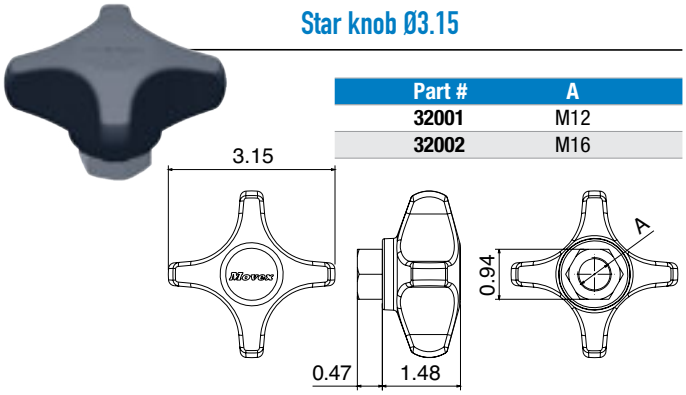


| Part # | A |
|---|---|
| 32001 | M12 |
| 32002 | M16 |

# Clamp for Guides Rail

| Material: |
|---|
| Stainless steel |

## Single clamp for guide rail

| Part # | Material | Type |
|---|---|---|
| **SRCR** | AISI 304 | A |
| **SRCS** | AISI 304 | B |

used with 5/16

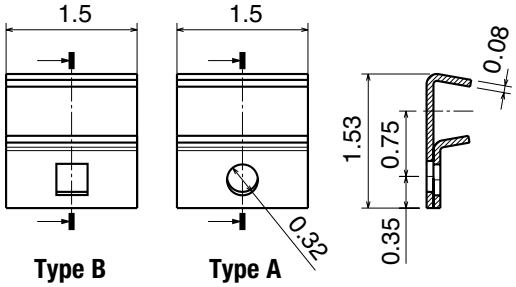

## Double clamp for guide rail

| Part # | A | Type |
|---|---|---|
| **DRC250** | 2.5 | A |
| **DRC375** | 3.75 | A |
| **DRC250SH** | 2.5 | B |

**TYPE A** used with 3/8 or M10 fastener
**TYPE B** used with 5/16 or M8 fastener

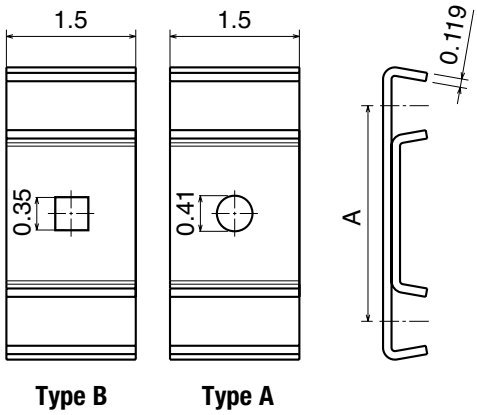

## Heavy duty guide rail clip

| Part # | A | B |
|---|---|---|
| **HDC625** | 0.625 | 5/16-18 |
| **HDC75** | 0.75 | 5/16-18 |
| **HDC100** | 1 | 5/16-18 |
| **HDC125** | 1.25 | 5/16-18 |

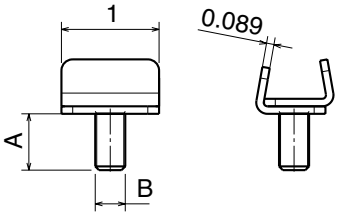

## Connecting element

| Part # | A |
|---|---|
| **39011** | 2 |
| **39012** | 3 |
| **39013** | 4 |

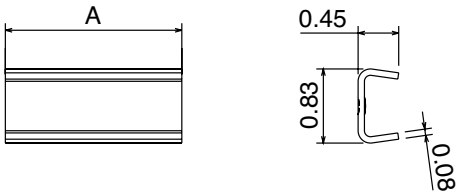

## Connecting clamp

| Part # | A |
|---|---|
| **39201Y** | 3 |
| **39202Y** | 4 |
| **39203Y** | 6 |

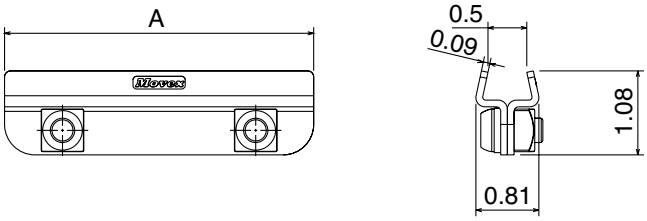

**Material:**
Stainless steel

## Rod

| Part # | A | B |
|---|---|---|
| 34911 | 3 | 1/2 |
| 34912 | 5 | 1/2 |
| 34913 | 7 | 1/2 |
| 34914 | 9 | 1/2 |

| Part # | A | B |
|---|---|---|
| 35011 | 3 | 5/8 |
| 35012 | 5 | 5/8 |
| 35013 | 7 | 5/8 |
| 35014 | 9 | 5/8 |

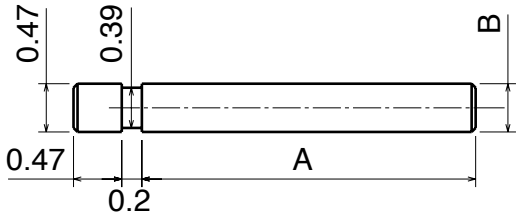


## Rod

| Part # | A | B | C |
|---|---|---|---|
| 35111 | 3 | 3/8-16 | 1/2 |
| 35112 | 5 | 3/8-16 | 1/2 |
| 35113 | 7 | 3/8-16 | 1/2 |
| 35114 | 9 | 3/8-16 | 1/2 |
| 35161 | 3 | 5/16-18 | 1/2 |
| 35162 | 5 | 5/16-18 | 1/2 |
| 35163 | 7 | 5/16-18 | 1/2 |
| 35164 | 9 | 5/16-18 | 1/2 |

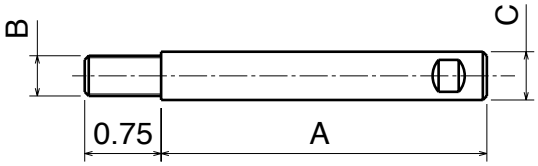


| Part # | A | B | C |
|---|---|---|---|
| 35211 | 3 | 3/8-16 | 5/8 |
| 35212 | 5 | 3/8-16 | 5/8 |
| 35213 | 7 | 3/8-16 | 5/8 |
| 35214 | 9 | 3/8-16 | 5/8 |
| 35261 | 3 | 5/16-18 | 5/8 |
| 35262 | 5 | 5/16-18 | 5/8 |
| 35263 | 7 | 5/16-18 | 5/8 |
| 35264 | 9 | 5/16-18 | 5/8 |

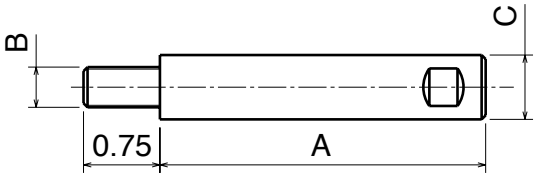


## Rod

| Part # | A | B | C |
|---|---|---|---|
| 34711 | 3 | 3/8-16 | 1/2 |
| 34712 | 5 | 3/8-16 | 1/2 |
| 34713 | 7 | 3/8-16 | 1/2 |
| 34714 | 9 | 3/8-16 | 1/2 |
| 34761 | 3 | 5/16-18 | 1/2 |
| 34762 | 5 | 5/16-18 | 1/2 |
| 34763 | 7 | 5/16-18 | 1/2 |
| 34764 | 9 | 5/16-18 | 1/2 |

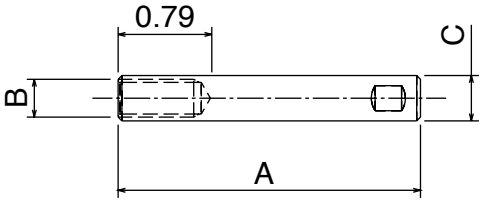


| Part # | A | B | C |
|---|---|---|---|
| 34811 | 3 | 3/8-16 | 5/8 |
| 34812 | 5 | 3/8-16 | 5/8 |
| 34813 | 7 | 3/8-16 | 5/8 |
| 34814 | 9 | 3/8-16 | 5/8 |
| 34861 | 3 | 5/16-18 | 5/8 |
| 34862 | 5 | 5/16-18 | 5/8 |
| 34863 | 7 | 5/16-18 | 5/8 |
| 34864 | 9 | 5/16-18 | 5/8 |

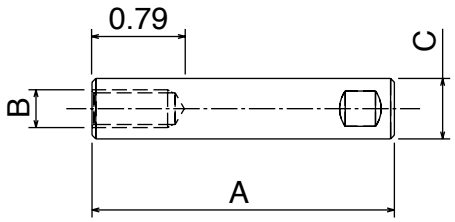


## Jointed rods

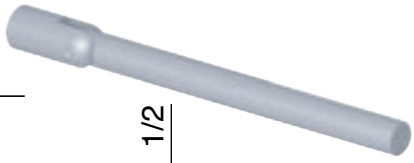

| Part # | A |
|---|---|
| 35711 | 3 |
| 35712 | 5 |
| 35713 | 7 |
| 35714 | 9 |

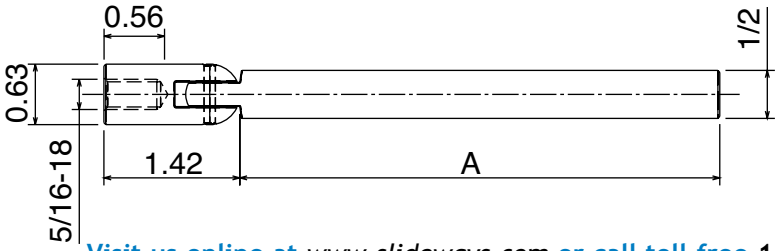

| Material: |
|---|
| Guide: anodized aluminum |
| Rollers: Acetal Resin |
| Screw: Stainless steel |

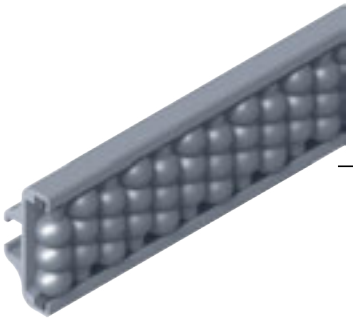

## Roller guides

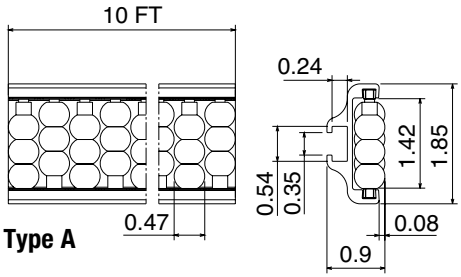


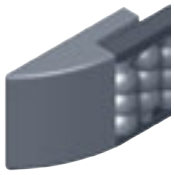

| Part # | Type |
|---|---|
| 35802Y | A |

Max fixing load M8 screw: 15 N/m

### Shoe

| Part # |
|---|
| 36401 |

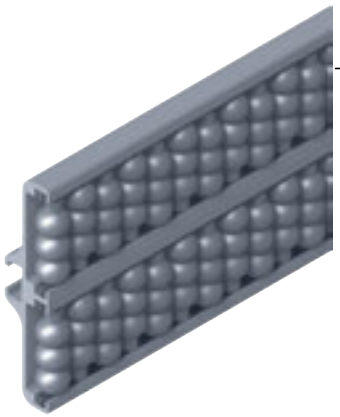

## Roller guides

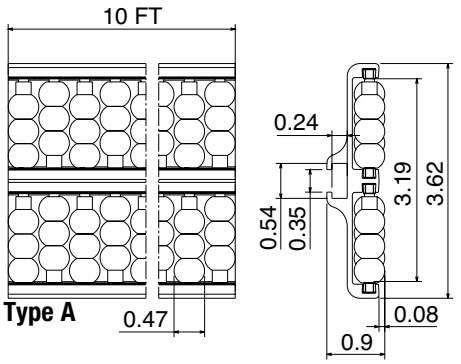


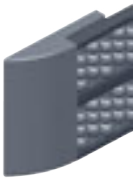

| Part # | Type |
|---|---|
| 35902Y | A |

Max fixing load M8 screw: 15 N/m

### Shoe

| Part # |
|---|
| 36501 |

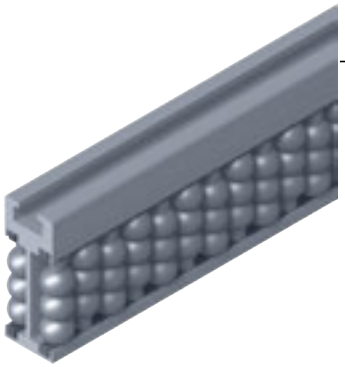

## Roller guides

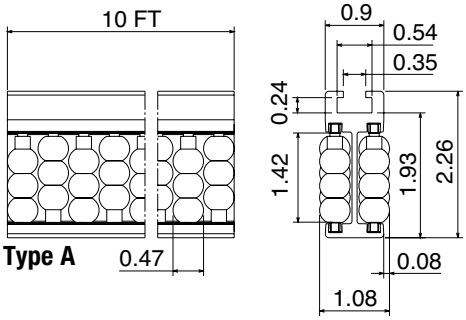


| Part # | Type |
|---|---|
| 36002Y | A |
| 36004Y | B |

Max fixing load M8 screw: 15 N/m

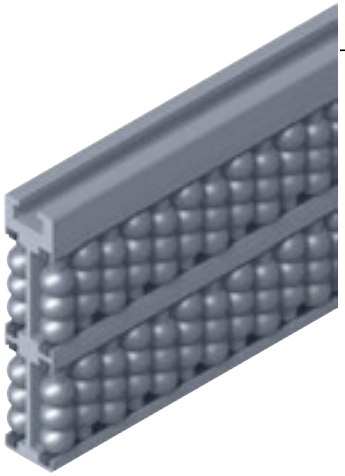

## Roller guides

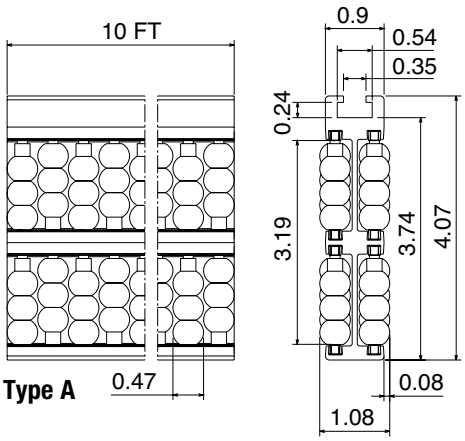

| Part # | Type |
|---|---|
| 36102Y | A |
| 36104Y | B |

Max fixing load M8 screw: 15 N/m

### Shoe

| Part # |
|---|
| 36701 |

| Material: |
|---|
| Shoe: PE HD |
| Pins: SS |
| Rollers: PE or acetal resin |

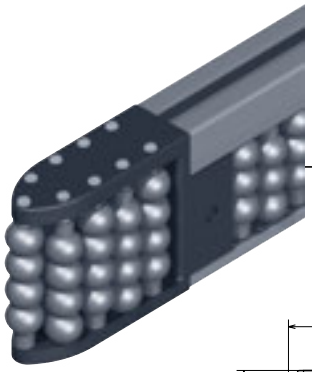

## Central roller shoe

| Part # | Type |
|---|---|
| 36621 | A |
| 36622 | B |

PATENT PENDING

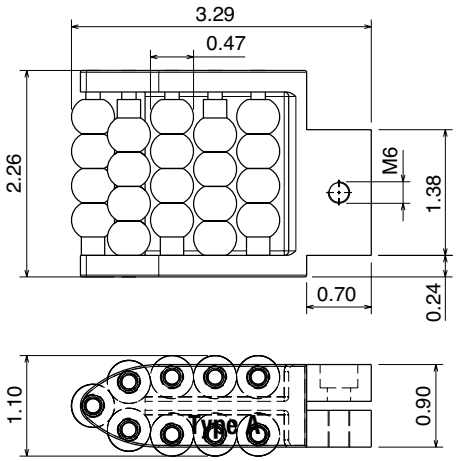


## Side roller shoe

| Part # | Type |
|---|---|
| 36421 | A |
| 36422 | B |

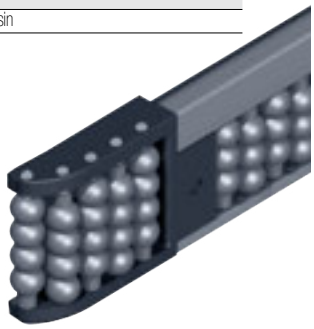

PATENT PENDING

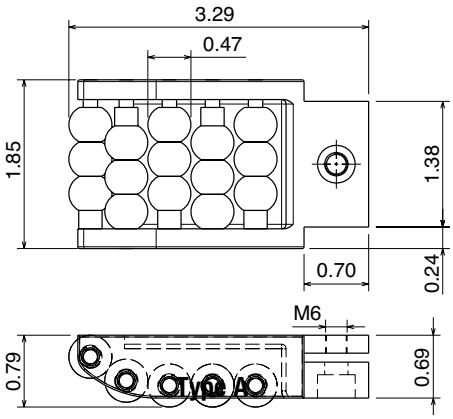


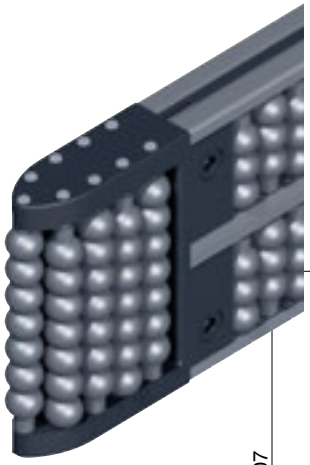

PATENT PENDING

| Part # | Type |
|---|---|
| 36721 | A |
| 36722 | B |

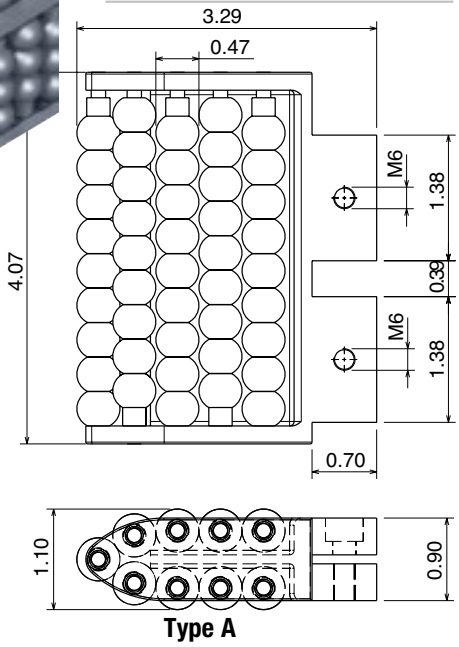


| Part # | Type |
|---|---|
| 36521 | A |
| 36522 | B |

PATENT PENDING

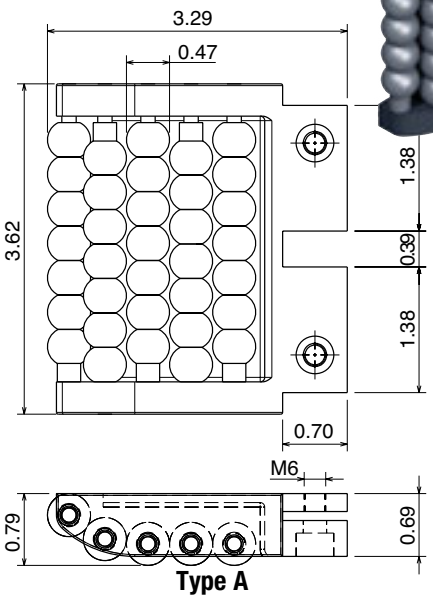

| Material: |
|---|
| Metal Profile and screws: Stainless steel |
| Connection module: PA |
| Rollers: Acetal Resin |

## Accumulation roller guides

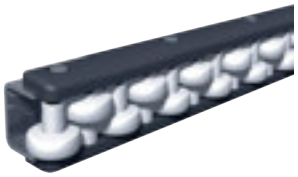

| Part # | A | Pin | Pin DIA |
|---|---|---|---|
| **35301** | 1 m | PA | 0.24 |
| **35302** | 2 m | PA | 0.24 |
| **35303** | 3 m | PA | 0.24 |

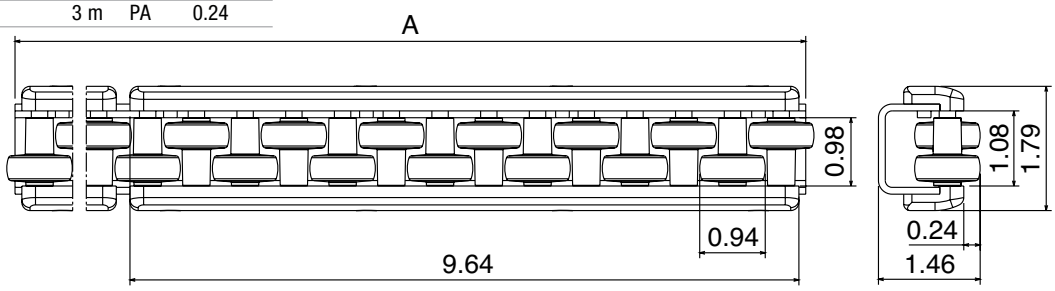


## Accumulation roller guides

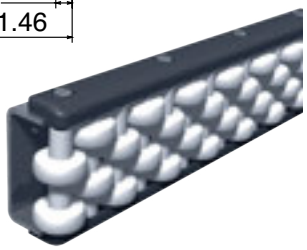

| Part # | A | Pin | Pin DIA |
|---|---|---|---|
| **35401** | 1 m | PA | 0.24 |
| **35402** | 2 m | PA | 0.24 |
| **35403** | 3 m | PA | 0.24 |

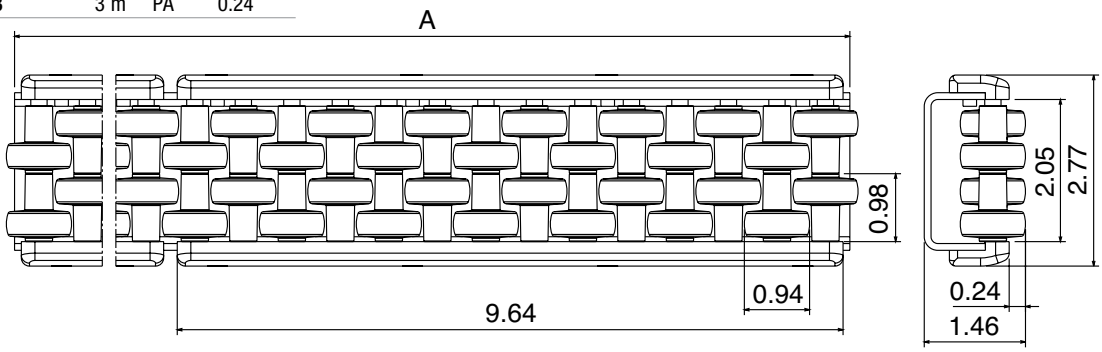


## Accumulation roller guides

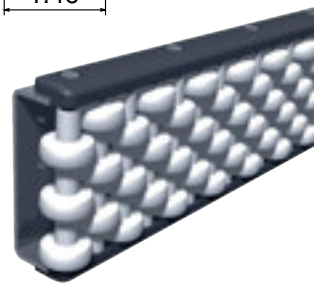

| Part # | A | Pin | Pin DIA |
|---|---|---|---|
| **35501** | 1 m | SS | 0.24 |
| **35502** | 2 m | SS | 0.24 |
| **35503** | 3 m | SS | 0.24 |

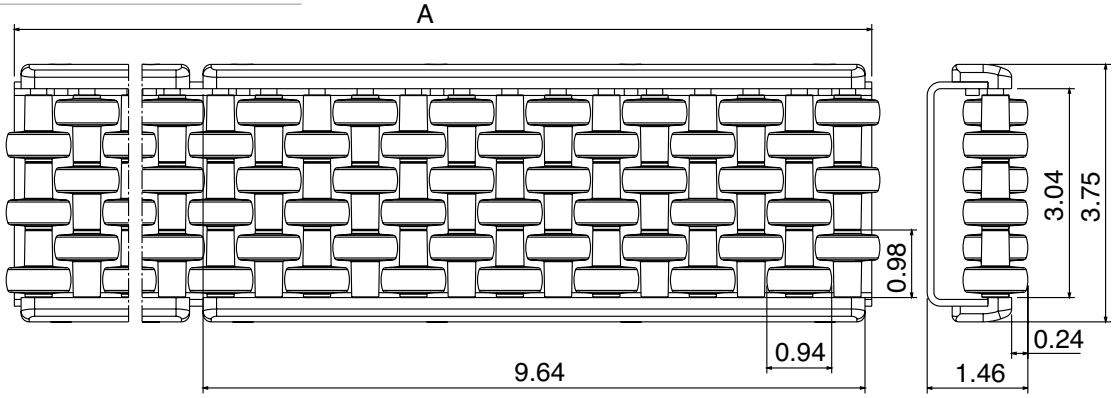

| Material: |
|---|
| Modules and rollers: acetal resin |
| Pins, screws and nuts: Stainless steel |

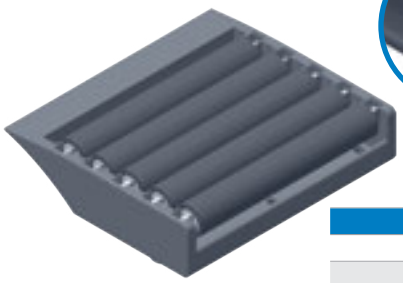

Smart Roll
with mini bearing
in stainless steel

## Transfer modules L=3,35

| Part # | Type |
|---|---|
| 36801 | A |
| 36802 | B |
| 36803 | C |

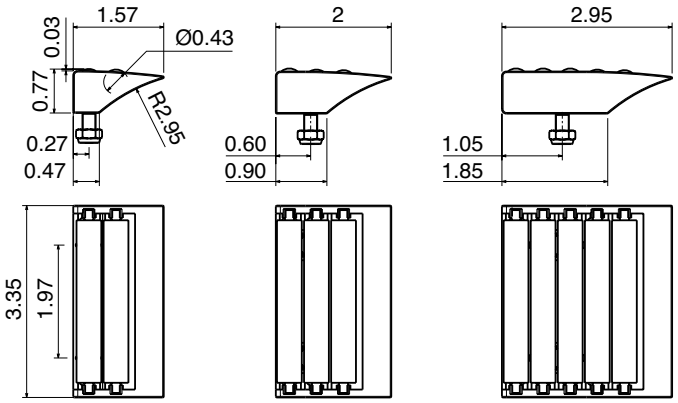


Type A Type B Type C

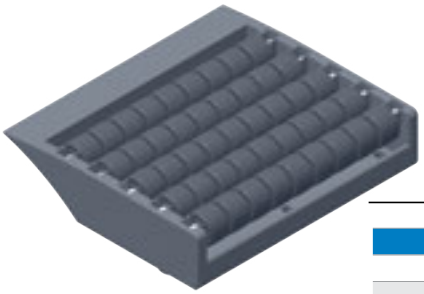

## Transfer modules L=3,35

| Part # | Type |
|---|---|
| 37001 | A |
| 37002 | B |
| 37003 | C |

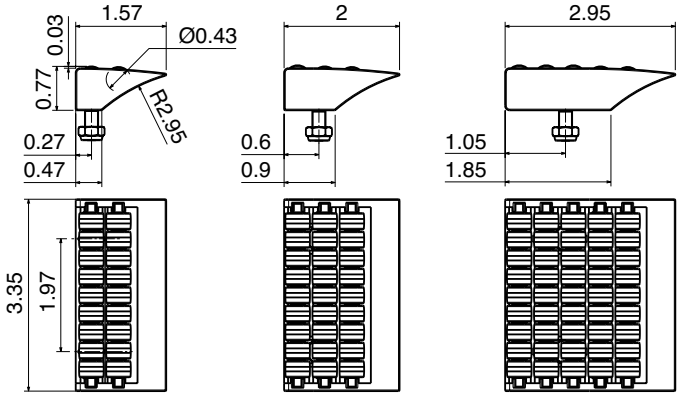


Type A Type B Type C

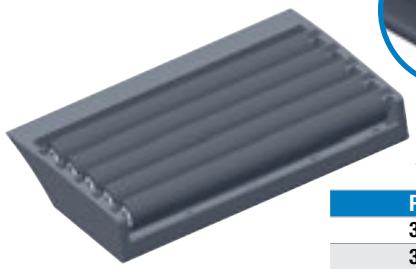

Smart Roll
with mini bearing
in stainless steel

## Transfer modules L=4,53

| Part # | Type |
|---|---|
| 36901 | A |
| 36902 | B |
| 36903 | C |

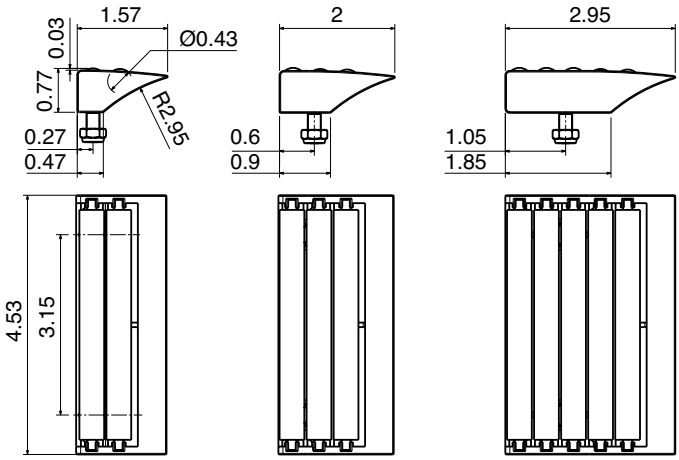


Type A Type B Type C

## Transfer modules L=4,53

| Part # | Type |
|---|---|
| 37101 | A |
| 37102 | B |
| 37103 | C |

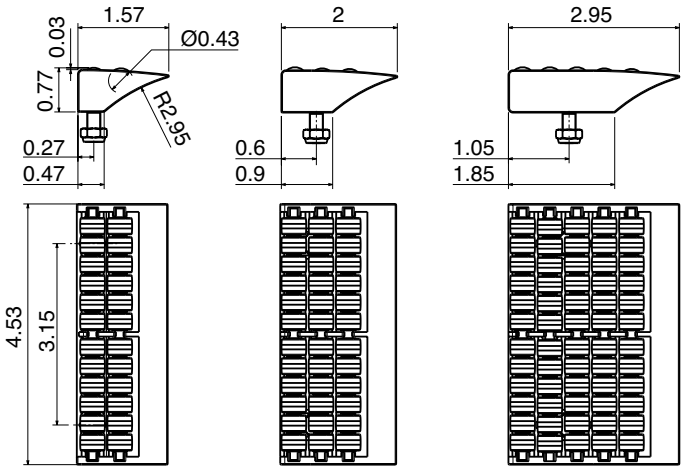


Type A Type B Type C

## Hinge

| Part # | A | B | C | D | E |
|---|---|---|---|---|---|
| **37201** | 0.43 | 0.55 | 0.41 | 0.25 | 0.24 |
| **37202** | 0.43 | 0.55 | 0.53 | 0.33 | 0.31 |
| **37203** | 0.71 | 0.83 | 0.53 | 0.33 | 0.31 |

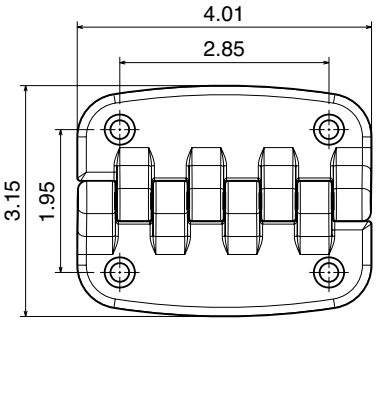

## Hinge

| Part # | C | D | E |
|---|---|---|---|
| **37301** | 0.41 | 0.25 | 0.24 |
| **37302** | 0.53 | 0.33 | 0.16 |

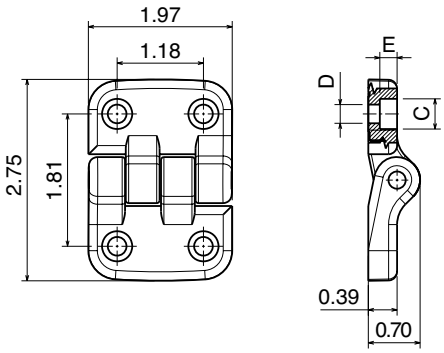


| Material: |
|---|
| Hinges: Polyamide |
| Pins: Stainless steel |

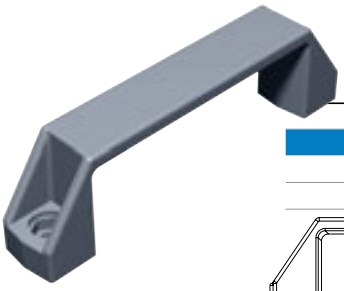

## Soft touch handle

| Part # |
|---|
| **38501** |

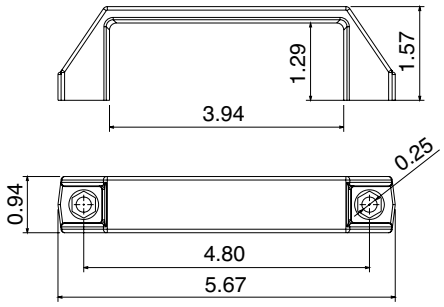


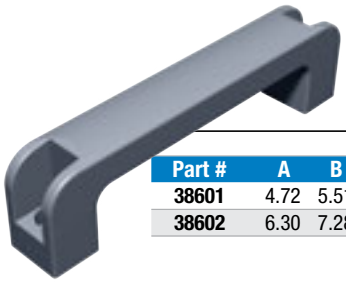

## Handle

| Part # | A | B | C | Ød | ØD | E | F |
|---|---|---|---|---|---|---|---|
| **38601** | 4.72 | 5.51 | 1.57 | 0.35 | 0.51 | 0.96 | 0.63 |
| **38602** | 6.30 | 7.28 | 1.89 | 0.35 | 0.59 | 1.14 | 0.63 |

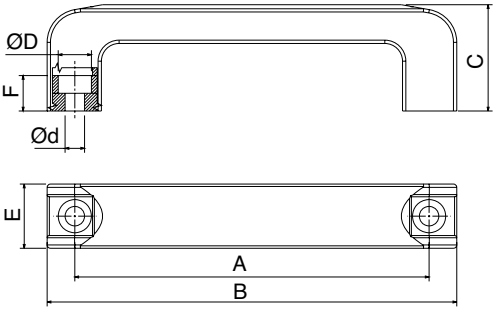


## Stainless Steel handle

**Stainless steel AISI 304**

| Part # | A |
|---|---|
| **39701** | 3.74 |
| **39702** | 3.94 |
| **39703** | 4.33 |

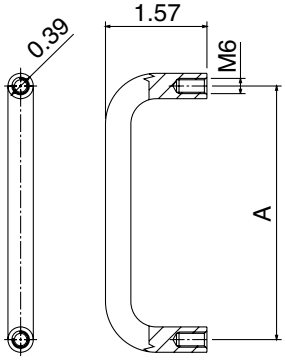

| Material: |
|---|
| Clamps: Polyamide |
| Screws and nuts: Stainless steel |

## T-clamp

| Part # | A |
|---|---|
| **37802Y** | 1/2 |

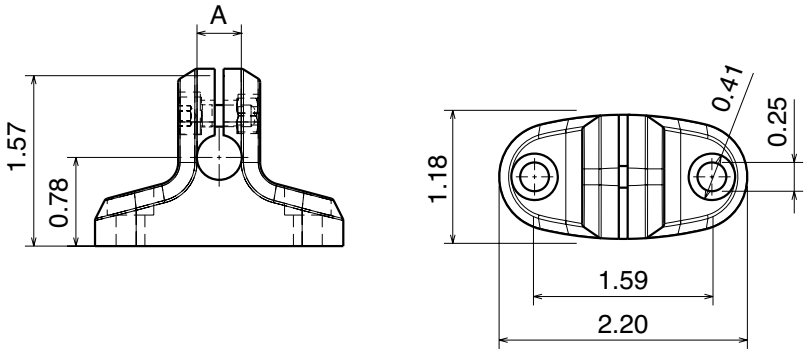


## Clamp for reflector

| Part # | A |
|---|---|
| **37902Y** | 1/2 |

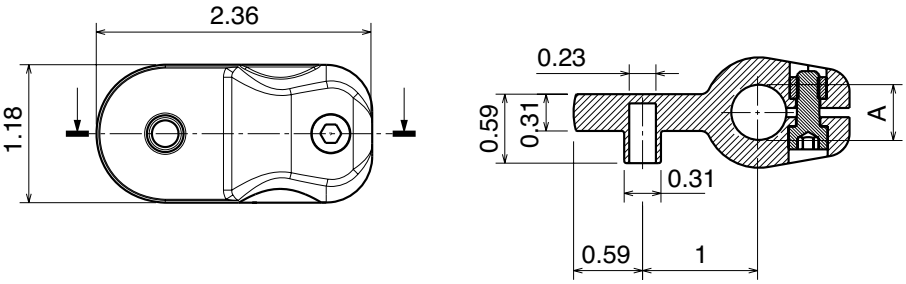


## Clamp for photocells or sensors

| Part # | A |
|---|---|
| **38002Y** | 1/2 |

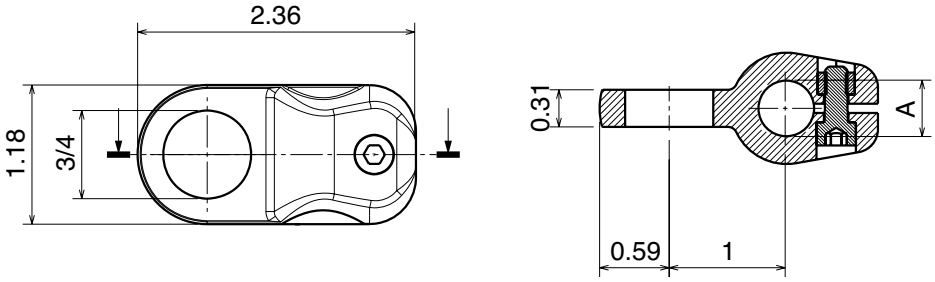

# Cross Clamp

| Material: |
|---|
| Clamps: Polyamide |
| Screws and nuts: Stainless steel |

## Cross clamp

| Part # | A | B |
|---|---|---|
| **38100Y** | 1/2 | 1/2 |
| **38102** | 5/8 | 5/8 |
| **38104Y** | 3/4 | 3/4 |

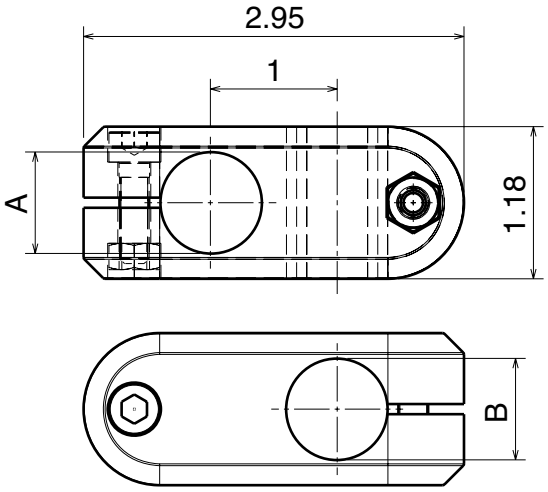

## Cross Block

| Part # | A | B |
|---|---|---|
| **39101** | 1/2 | 1/2 |
| **39102** | 5/8 | 5/8 |
| | | |

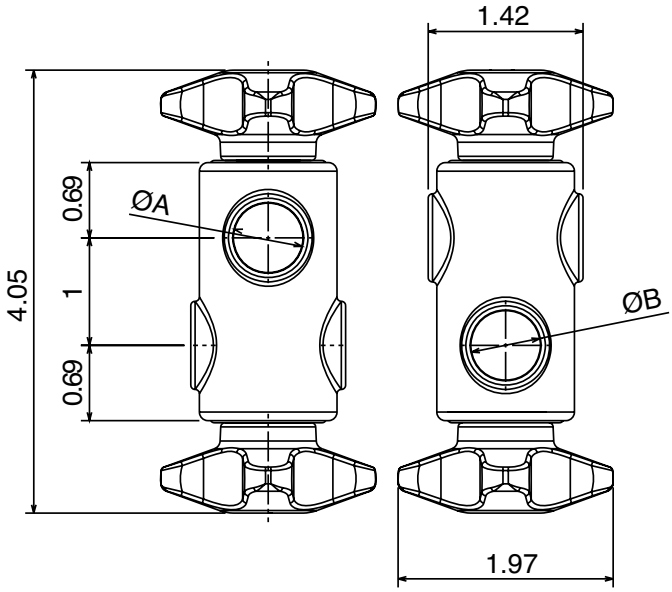

## Cross clamp

| Part # | A | B |
|---|---|---|
| **38202Y** | 1/2 | 1/2 |

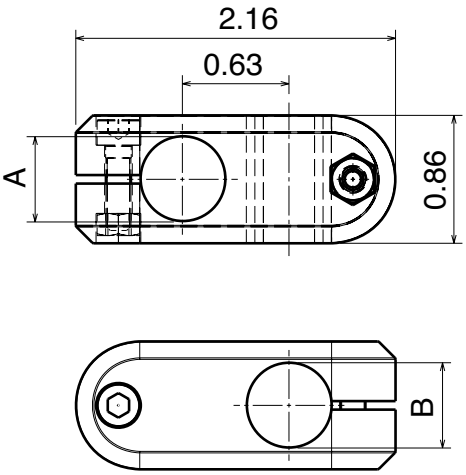


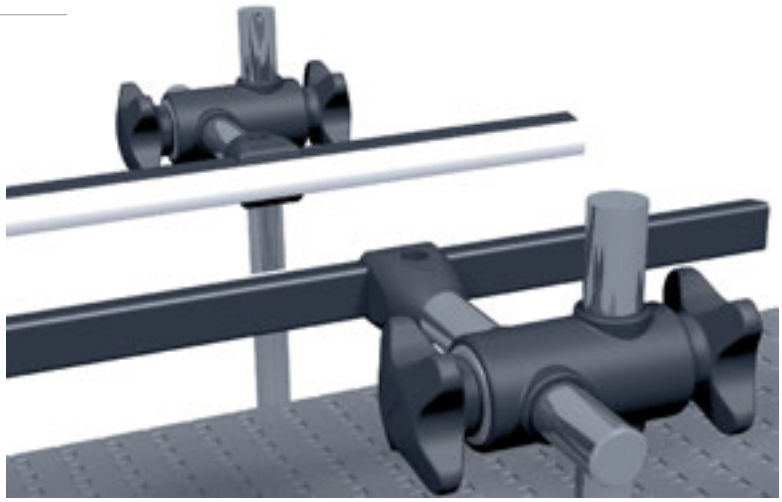

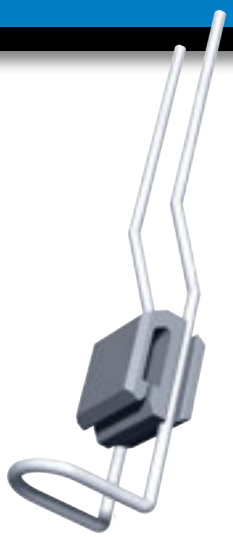

| Material: |
|---|
| Support: Stainless steel |
| Clamps: PA |

## Drip Tray Supports

| Part # | L | |
|---|---|---|
| **38701** | 7.09 | A |
| **38702** | 9.84 | A |
| **38703** | 7.09 | B |
| **38704** | 9.84 | B |
| **38705** | 11.02 | B |
| **38706** | 9.68 | C |
| **38707** | 15.59 | C |

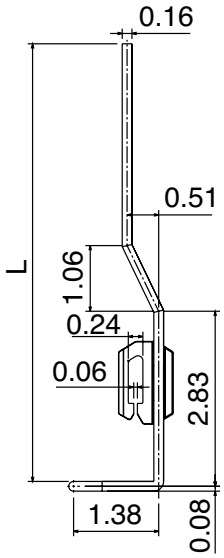


**Type A**

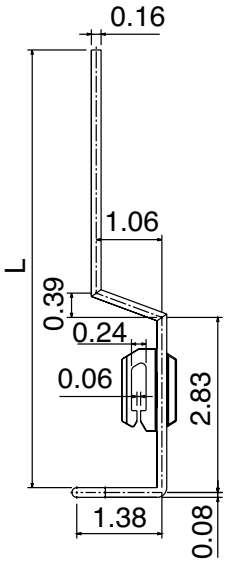


**Type B**

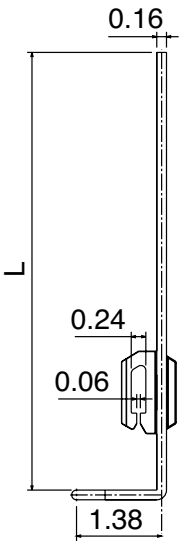


**Type C**

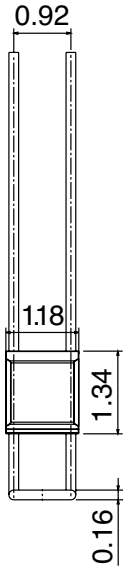


## Fixing washer

| Part # |
|---|
| **38801** |

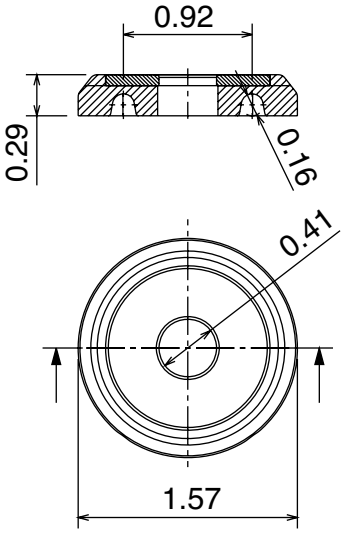


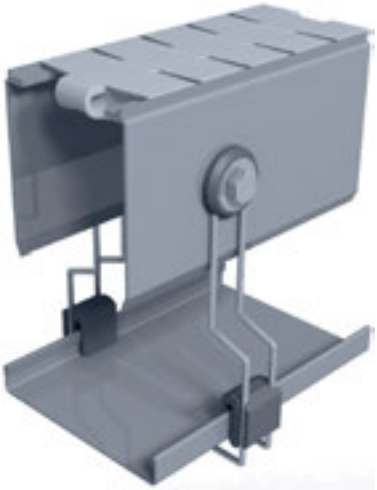

| Material: |
|---|
| Base: Polyamide |
| Screws and washers: Stainless steel |
| Inserts nuts: nickel plated brass |

## Bipod

| Part # | ØA | Insert |
|---|---|---|
| **40101** | 1.9 | M16 |
| **40105** | 2 | M16 |
| **40102** | 2.375 | M16 |
| **40101Y** | 1.9 | 5/8-11 |
| **40105Y** | 2 | 5/8-11 |
| **40102Y** | 2.375 | 5/8-11 |

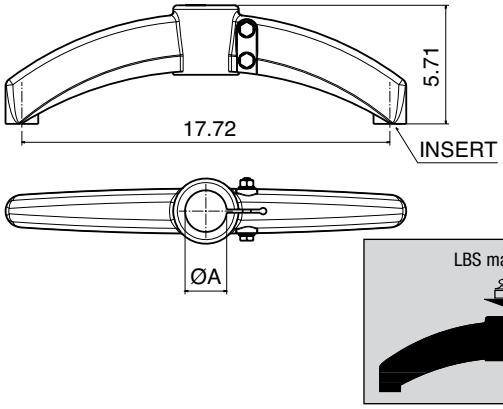

## Bipod 120° with connector

| Part # | ØA | ØB | Insert |
|---|---|---|---|
| **40301** | 1.9 | 1.9 | M16 |
| **40305** | 2 | 1.9 | M16 |
| **40302** | 2.375 | 1.9 | M16 |
| **40303** | 1.9 | 1.66 | M16 |
| **40306** | 2 | 1.66 | M16 |
| **40304** | 2.375 | 1.66 | M16 |
| **40301Y** | 1.9 | 1.9 | 5/8-11 |
| **40305Y** | 2 | 1.9 | 5/8-11 |
| **40302Y** | 2.375 | 1.9 | 5/8-11 |
| **40303Y** | 1.9 | 1.66 | 5/8-11 |
| **40306Y** | 2 | 1.66 | 5/8-11 |
| **40304Y** | 2.375 | 1.66 | 5/8-11 |

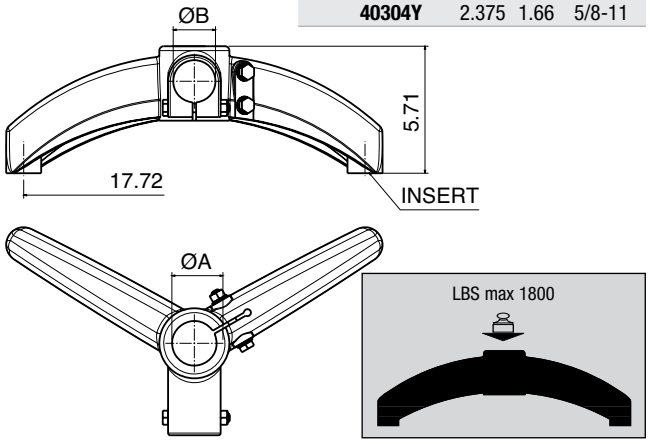

## Bipod 180° with connector

| Part # | ØA | ØB | Insert |
|---|---|---|---|
| **40201** | 1.9 | 1.9 | M16 |
| **40205** | 2 | 1.9 | M16 |
| **40202** | | 1.9 | M16 |
| **40203** | | 1.66 | M16 |
| **40206** | | 1.66 | M16 |
| **40204** | | 1.66 | M16 |
| **40201Y** | | 1.9 | 5/8-11 |
| **40205Y** | | 1.9 | 5/8-11 |
| **40202Y** | | 1.9 | 5/8-11 |
| **40203Y** | | 1.66 | 5/8-11 |
| **40206Y** | | 1.66 | 5/8-11 |
| **40204Y** | | 1.66 | 5/8-11 |

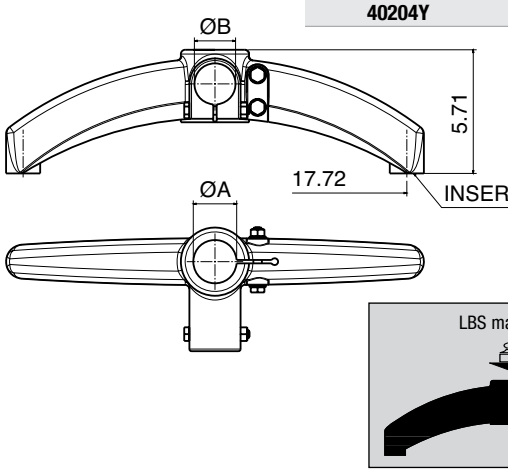

## Tripod

| Part # | ØA | Insert |
|---|---|---|
| **40401** | 1.9 | M16 |
| **40405** | 2 | M16 |
| **40402** | 2.375 | M16 |
| **40401Y** | 1.9 | 5/8-11 |
| **40405Y** | 2 | 5/8-11 |
| **40402Y** | 2.375 | 5/8-11 |

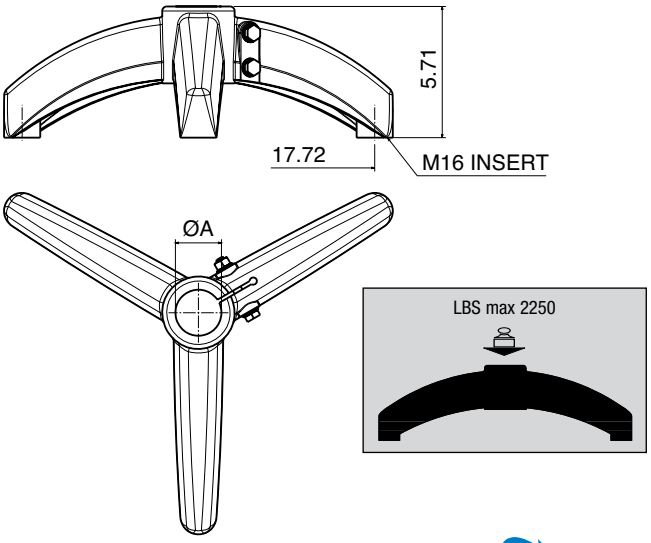

| Material: |
|---|
| Side bracket: Polyamide |
| Screws and washers: Stainless steel |
| Nuts: nickel plated brass |

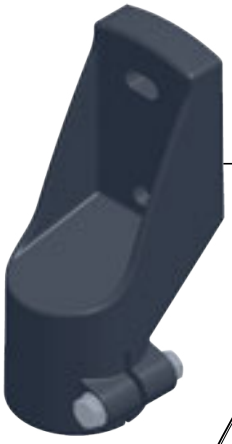

## Side mounting top bracket

| Part # | ØA |
|---|---|
| **40701** | 1.9 |
| **40702** | 2 |

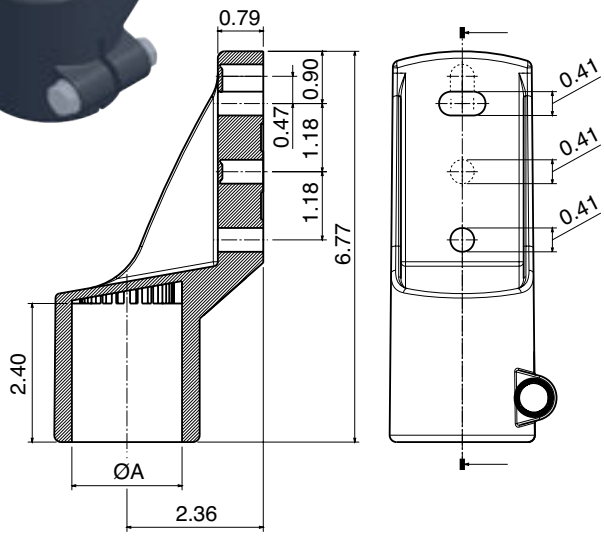


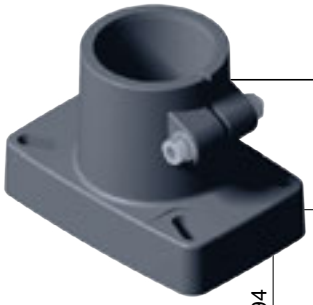

## Support head

| Part # | ØA |
|---|---|
| **41001** | 1.9 |
| **41002** | 2.375 |

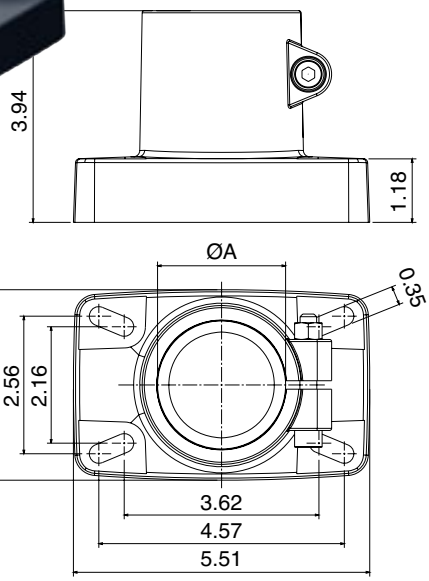

## Support head

| Part | Part # | ØA |
|---|---|---|
| | **41101** | 1.9 |
| | **41102** | 2 |

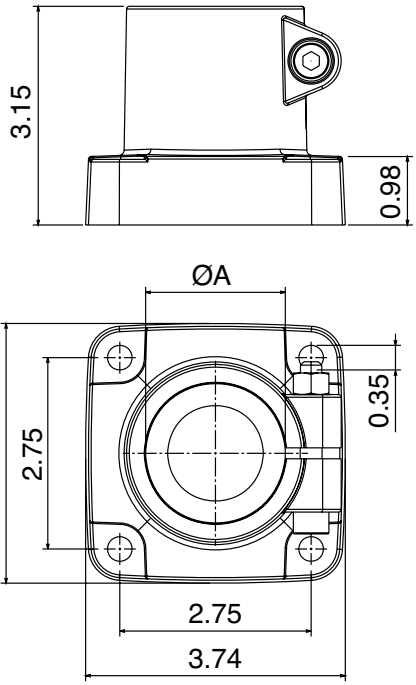

## Side mounting top bracket

| Part # |
|---|
| **40801** |

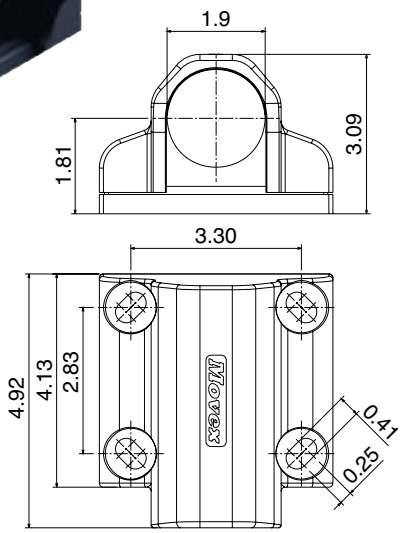

| Material: |
|---|
| Joint: Polyamide |
| Screws and washers: Stainless steel |
| Nuts: nickel plated brass |

## Connecting joint

| Part # | ØA | ØB | C | D | E |
|---|---|---|---|---|---|
| **41301** | 1.9 | 1.9 | 5.27 | 3.38 | 2.68 |
| **41302** | 2.375 | 1.9 | 5.75 | 3.86 | 3.15 |
| **41303** | 2.375 | 2.375 | 5.75 | 3.86 | 3.15 |

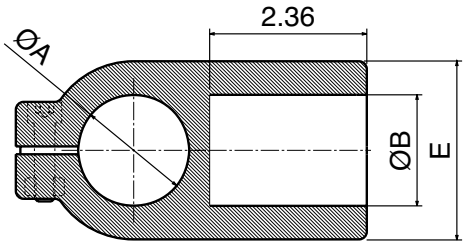


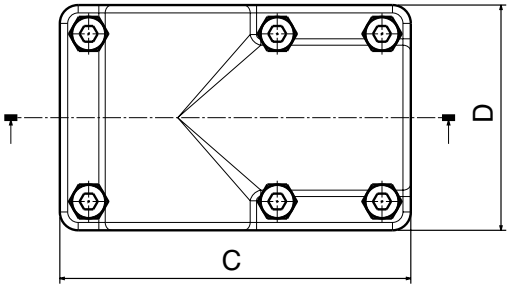


## Connecting joint

-

| Part #. | ØA |
|---|---|
| **41701** | 1.9 |
| **41702** | 2 |

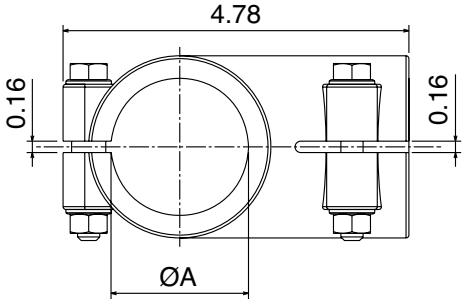


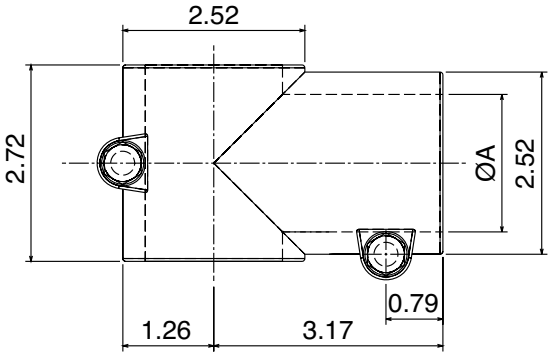

| Material: |
|---|
| Plug: Polyamide |
| Inserts: PA or nickel plated brass |

## Expansions plugs

| Part # Brass Bush | Part # PA Bush | ØA | B | C | M |
|---|---|---|---|---|---|
| 41903 | 41913Y | 1.5 | 1.575 | 0.2 | 5/16-18 |
| 41904 | 41914Y | 1.5 | 1.575 | 0.2 | 3/8-16 |
| 41905 | 41915Y | 1.66 | 1.575 | 0.2 | 5/16-18 |
| 41906 | 41916Y | 1.66 | 1.575 | 0.2 | 3/8-16 |

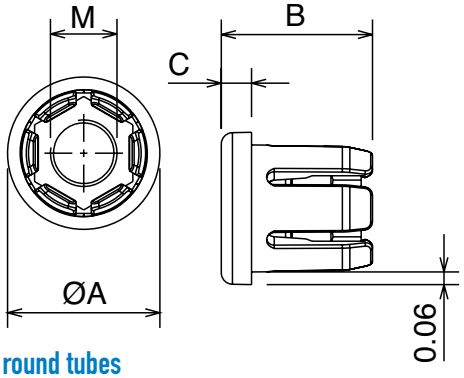

## Threaded bushings for round tubes

| Part # | A | B | C | |
|---|---|---|---|---|
| 41523Y | 1.5 | 0.065 | 3/8-16 | 1.57 |
| 41524Y | | | 1/2-13 | 1.57 |
| 41526Y | | | 5/8-11 | 1.57 |
| 41535Y | 1.66 | 0.065 | 3/8-16 | 1.69 |
| 41536Y | | | 1/2-13 | 1.69 |
| 41538Y | | | 5/8-11 | 1.69 |
| 41550Y | 1.9 | 0.065 | 3/8-16 | 1.89 |
| 41551Y | | | 1/2-13 | 1.89 |
| 41501Y | | | 5/8-11 | 1.89 |
| 41502Y | | | 3/4-10 | 1.89 |
| 41558Y | | 0.109 | 3/8-16 | 1.89 |
| 41559Y | | | 1/2-13 | 1.89 |
| 41561Y | | | 5/8-11 | 1.89 |
| 41562Y | | | 3/4-10 | 1.89 |
| 41566Y | 2 | 0.065 | 3/8-16 | 1.97 |
| 41567Y | | | 1/2-13 | 1.97 |
| 41569Y | | | 5/8-11 | 1.97 |
| 41570Y | | | 3/4-10 | 1.97 |
| 41505Y | 2.38 | 0.08 | 5/8-11 | 2.16 |
| 41592Y | | 0.109 | 5/8-11 | 2.16 |

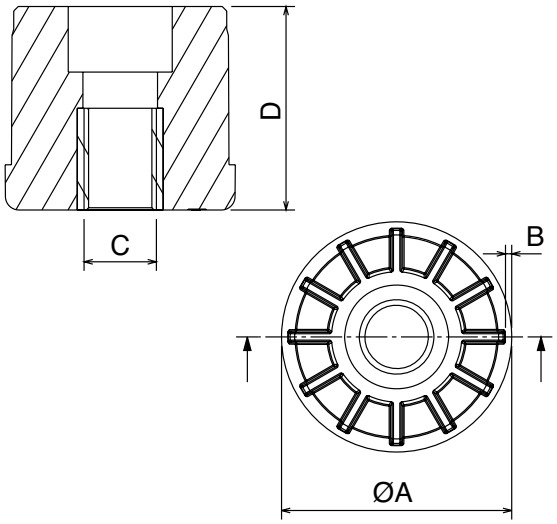

## Threaded bushings for square tubes

| Part # | A | B | C | |
|---|---|---|---|---|
| 41601Y | 1 | 0.065 | 3/8-16 | 1.18 |
| 41602Y | | | 1/2-13 | 1.18 |
| 41611Y | 1.18 | 0.065 | 3/8-16 | 1.30 |
| 41681Y | 1.5 | 0.065 | 3/8-16 | 1.69 |
| 41682Y | | | 1/2-13 | 1.69 |
| 41684Y | | | 5/8-11 | 1.69 |
| 41685Y | | | 3/4-10 | 1.69 |
| 41686Y | | 0.12 | 3/8-16 | 1.69 |
| 41687Y | | | 1/2-13 | 1.69 |
| 41689Y | | | 5/8-11 | 1.69 |
| 41690Y | | | 3/4-10 | 1.69 |
| 41653Y | 2 | 0.065 | 3/8-16 | 1.97 |
| 41654Y | | | 1/2-13 | 1.97 |
| 41656Y | | | 5/8-11 | 1.97 |
| 41657Y | | | 3/4-10 | 1.97 |
| 41661Y | | 0.109 | 3/8-16 | 1.97 |
| 41662Y | | | 1/2-13 | 1.97 |
| 41664Y | | | 5/8-11 | 1.97 |
| 41665Y | | | 3/4-10 | 1.97 |
| 41674Y | 2.38 | 0.08 | 5/8-11 | 2.16 |

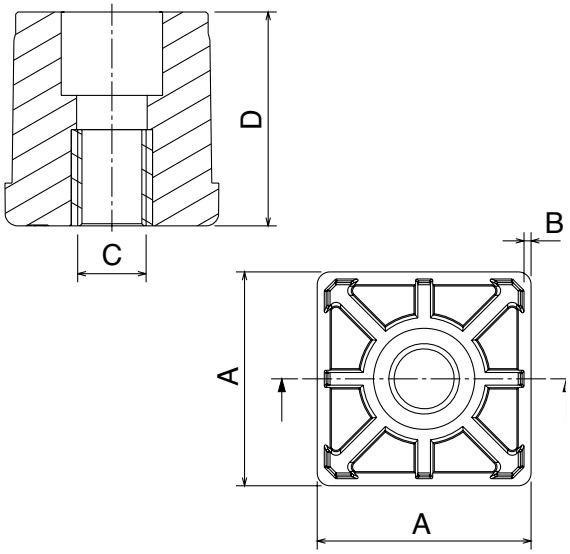

# Threaded bushings: SS

| Material: |
|---|
| Plug: Stainless Steel |

## Threaded bushings for square tube

| Part # | A | C | ØB | E |
|---|---|---|---|---|
| **42801Y** | 1.5 | 5/8-11 | 0.79 | 0.39 |
| **42802Y** | 1.5 | 3/4-10 | 0.9 | 0.43 |
| **42805Y** | 1.95 | 5/8-11 | 0.79 | 0.39 |
| **42806Y** | 1.95 | 3/4-10 | 09 | 0.43 |
| **42899Y** | 1.95 | 1-8 | 1.18 | 0.45 |
| **42807Y** | 2.38 | 5/8-11 | 0.79 | 0.39 |
| **42808Y** | 2.38 | 3/4-10 | 0.9 | 0.43 |

**Stainless steel AISI 304**

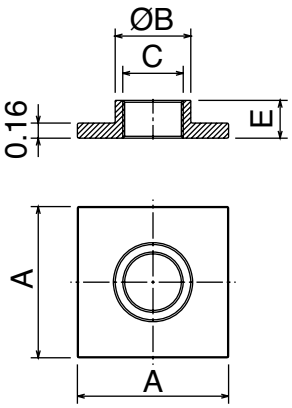

## Threaded bushings for round tube

| Part # | C | ØB | E |
|---|---|---|---|
| **42901Y** | 5/8-11 | 0.79 | 0.34 |
| **42902Y** | 3/4-10 | 0.9 | 0.43 |

**Stainless steel AISI 304**

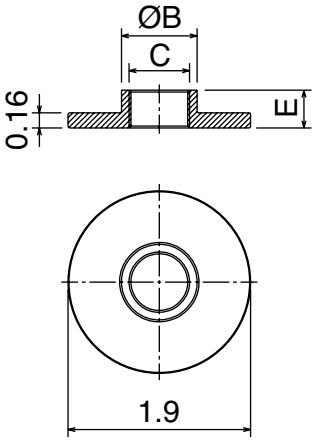

## Threaded bushings for rectangular tube

| Part # | C | ØB | E |
|---|---|---|---|
| **43001Y** | 5/8-11 | 0.79 | 0.34 |
| **43002Y** | 3/4-10 | 0.9 | 0.43 |

**Stainless steel AISI 304**

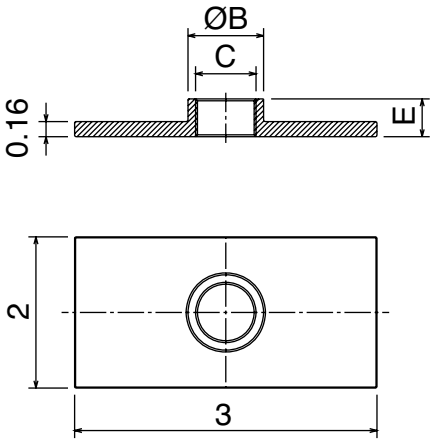

Spindle material

| Part # SS | Part # FeZn | D | A | K | TH | L | Ball | Type | LBS |
|---|---|---|---|---|---|---|---|---|---|
| 90102Y | 90102ZY | 1.58 | 3/8-16 | 0.28 | 3.94 | 3.35 | A | X | 2250 |
| 90202Y | 90202ZY | 1.58 | 1/2-13 | 0.35 | 3.94 | 3.35 | B | X | 2700 |
| 90203Y | 90203ZY | 1.58 | 1/2-13 | 0.35 | 5.9 | 5.31 | B | X | 2700 |
| 90302Y | 90302ZY | 1.58 | 5/8-11 | 0.51 | 3.94 | 3.35 | B | X | 3375 |
| 90303Y | 90303ZY | 1.58 | 5/8-11 | 0.51 | 5.9 | 5.31 | B | X | 3375 |
| 90302HY | 90302ZHY | 1.58 | 5/8-11 | 0.63 | 3.94 | 3.35 | B | Y | 3375 |
| 90303HY | 90303ZHY | 1.58 | 5/8-11 | 0.63 | 5.9 | 5.31 | B | Y | 3375 |

**SS:** Stainless steel
**FeZn:** Zinc plated steel

Spindle material

| Part # SS | Part # FeZn | D | A | K | TH | L | Ball | Type | LBS |
|---|---|---|---|---|---|---|---|---|---|
| 90402Y | 90402ZY | 1.97 | 3/8-16 | 0.28 | 3.94 | 3.35 | A | X | 2250 |
| 90502Y | 90502ZY | 1.97 | 1/2-13 | 0.35 | 3.94 | 3.35 | B | X | 2700 |
| 90503Y | 90503ZY | 1.97 | 1/2-13 | 0.35 | 5.9 | 5.31 | B | X | 2700 |
| 90602Y | 90602ZY | 1.97 | 5/8-11 | 0.51 | 3.94 | 3.35 | B | X | 3375 |
| 90603Y | 90603ZY | 1.97 | 5/8-11 | 0.51 | 5.9 | 5.31 | B | X | 3375 |
| 90602HY | 90602ZHY | 1.97 | 5/8-11 | 0.63 | 3.94 | 3.35 | B | Y | 3375 |
| 90603HY | 90603ZHY | 1.97 | 5/8-11 | 0.63 | 5.9 | 5.31 | B | Y | 3375 |

**SS:** Stainless steel
**FeZn:** Zinc plated steel

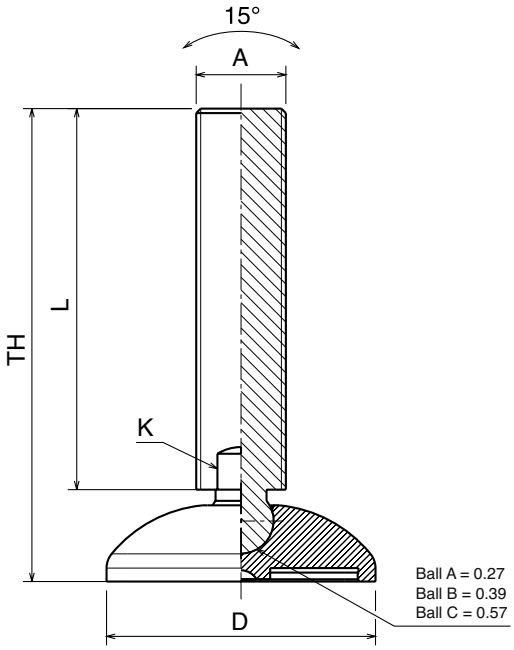


Spindle material

| Part # SS | Part # FeZn | D | A | K | TH | L | Ball | Type | LBS |
|---|---|---|---|---|---|---|---|---|---|
| 90702Y | 90702ZY | 2.36 | 1/2-13 | 0.35 | 4.13 | 3.35 | B | X | 2700 |
| 90703Y | 90703ZY | 2.36 | 1/2-13 | 0.35 | 6.1 | 5.31 | B | X | 2700 |
| 90801Y | 90801ZY | 2.36 | 5/8-11 | 0.51 | 4.13 | 3.35 | B | X | 3375 |
| 90802Y | 90802ZY | 2.36 | 5/8-11 | 0.51 | 6.1 | 5.31 | B | X | 3375 |
| 90803Y | 90803ZY | 2.36 | 5/8-11 | 0.51 | 8.07 | 7.28 | B | X | 3375 |
| 90801HY | 90801ZHY | 2.36 | 5/8-11 | 0.63 | 4.13 | 3.35 | B | Y | 3375 |
| 90802HY | 90802ZHY | 2.36 | 5/8-11 | 0.63 | 6.1 | 5.31 | B | Y | 3375 |
| 90803HY | 90803ZHY | 2.36 | 5/8-11 | 0.63 | 8.07 | 7.28 | B | Y | 3375 |
| 90902Y | 90902ZY | | 3/4-10 | 0.63 | 6.1 | 5.31 | C | X | 3600 |
| 90903Y | 90903ZY | | 3/4-10 | 0.63 | 8.07 | 7.28 | C | X | 3600 |
| 90902HY | 90902ZHY | | 3/4-10 | 0.79 | 6.1 | 5.31 | C | Y | 3600 |
| 90903HY | 90903ZHY | | 3/4-10 | 0.79 | 8.07 | 7.28 | C | Y | 3600 |

**SS:** Stainless steel
**FeZn:** Zinc plated steel

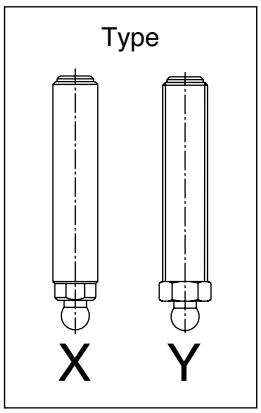

# Adjustable Leveler Basic

Spindle material

| Part # SS | Part # FeZn | D | A | K | TH | L | Ball | Type | LBS |
|---|---|---|---|---|---|---|---|---|---|
| 95302Y | 95302ZY | 3.15 | 1/2-13 | 0.35 | 4.13 | 3.35 | B | X | 2700 |
| 95303Y | 95303ZY | 3.15 | 1/2-13 | 0.35 | 6.1 | 5.31 | B | X | 2700 |
| 95401Y | 95401ZY | 3.15 | 5/8-11 | 0.51 | 4.13 | 3.35 | B | X | 3375 |
| 95402Y | 95402ZY | 3.15 | 5/8-11 | 0.51 | 6.1 | 5.31 | B | X | 3375 |
| 95403Y | 95403ZY | 3.15 | 5/8-11 | 0.51 | 8.07 | 7.28 | B | X | 3375 |
| 95401HY | 95401ZHY | 3.15 | 5/8-11 | 0.63 | 4.13 | 3.35 | B | Y | 3375 |
| 95402HY | 95402ZHY | 3.15 | 5/8-11 | 0.63 | 6.1 | 5.31 | B | Y | 3375 |
| 95403HY | 95403ZHY | 3.15 | 5/8-11 | 0.63 | 8.07 | 7.28 | B | Y | 3375 |
| 95502Y | 95502ZY | 3.15 | 3/4-10 | 0.63 | 6.1 | 5.31 | C | X | 4050 |
| 95503Y | 95503ZY | 3.15 | 3/4-10 | 0.63 | 8.07 | 7.28 | C | X | 4050 |
| 95502HY | 95502ZHY | 3.15 | 3/4-10 | 0.79 | 6.1 | 5.31 | C | Y | 4050 |
| 95503HY | 95503ZHY | 3.15 | 3/4-10 | 0.79 | 8.07 | 7.28 | C | Y | 4050 |

**SS:** Stainless steel
**FeZn:** Zinc plated steel

Spindle material

| ---SSPart # FeZn | D | A | K | TH | L | Ball | Type | LBS | |
|---|---|---|---|---|---|---|---|---|---|
| 95601Y | 95601ZY | 3.94 | 5/8-11 | 0.51 | 4.25 | 3.35 | B | X | 3375 |
| 95602Y | 95602ZY | 3.94 | 5/8-11 | 0.51 | 6.22 | 5.31 | B | X | 3375 |
| 95603Y | 95603ZY | 3.94 | 5/8-11 | 0.51 | 8.19 | 7.28 | B | X | 3375 |
| 95601HY | 95601ZHY | 3.94 | 5/8-11 | 0.63 | 4.25 | 3.35 | B | Y | 3375 |
| 95602HY | 95602ZHY | 3.94 | 5/8-11 | 0.63 | 6.22 | 5.31 | B | Y | 3375 |
| 95603HY | 95603ZHY | 3.94 | 5/8-11 | 0.63 | 8.19 | 7.28 | B | Y | 3375 |
| 95702Y | 95702ZY | 3.94 | 3/4-10 | 0.63 | 6.22 | 5.31 | C | X | 4050 |
| 95703Y | 95703ZY | 3.94 | 3/4-10 | 0.63 | 8.19 | 7.28 | C | X | 4050 |
| 95702HY | 95702ZHY | 3.94 | 3/4-10 | 0.79 | 6.22 | 5.31 | C | Y | 4050 |
| 95703HY | 95703ZHY | 3.94 | 3/4-10 | 0.79 | 8.19 | 7.28 | C | Y | 4050 |

**SS:** Stainless steel
**FeZn:** Zinc plated steel

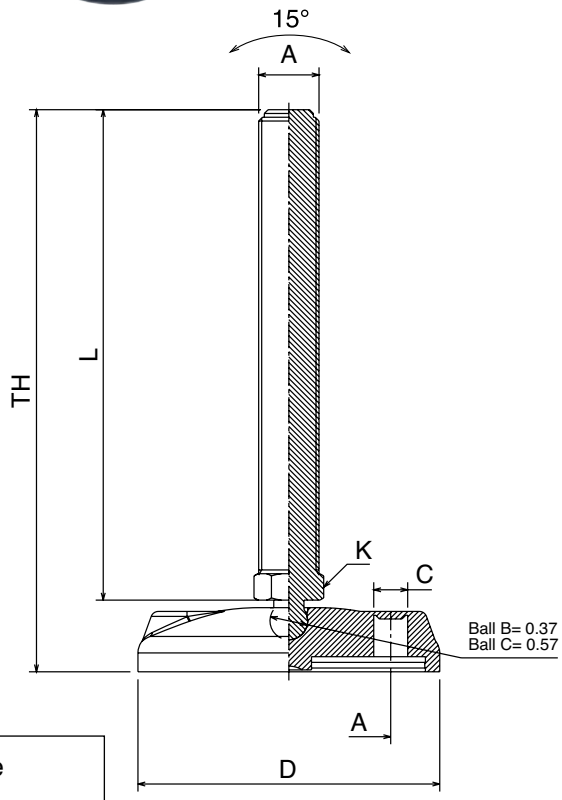


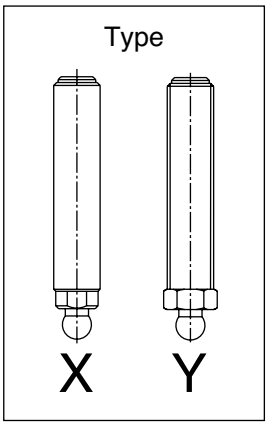


## Anti-slip pad

| Part | Article-Nr. | For base |
|---|---|---|
| 996 | 99604 | DIA 3.15 |
| 996 | 99605 | DIA 3.94 |

Spindle material

| Part # SS | Part # FeZn | D | A | K | TH | L | A | C | Type | LBS |
|---|---|---|---|---|---|---|---|---|---|---|
| 91002Y | 91002ZY | 3.15 | 1/2-13 | 0.35 | 5.9 | 4.8 | 2.13 | 0.35 | X | 2700 |
| 91003Y | 91003ZY | 3.15 | 1/2-13 | 0.35 | 7.87 | 6.77 | 2.13 | 0.35 | X | 2700 |
| 91101Y | 91101ZY | 3.15 | 5/8-11 | 0.51 | 3.74 | 2.64 | | 0.35 | X | 3375 |
| 91102Y | 91102ZY | 3.15 | 5/8-11 | 0.51 | 5.71 | 4.61 | | 0.35 | X | 3375 |
| 91103Y | 91103ZY | 3.15 | 5/8-11 | 0.51 | 7.68 | 6.57 | | 0.35 | X | 3375 |
| 91202Y | 91202ZY | 3.15 | 3/4-10 | 0.63 | 6.69 | 5.59 | | 0.35 | X | 3600 |
| 91203Y | 91203ZY | 3.15 | 3/4-10 | 0.63 | 8.66 | 7.56 | | 0.35 | X | 3600 |
| 91202HY | 91202ZHY | 3.15 | 3/4-10 | 0.79 | 6.69 | 5.59 | | 0.35 | Y | 3600 |
| 91203HY | 91203ZHY | 3.15 | 3/4-10 | 0.79 | 8.66 | 7.56 | | 0.35 | Y | 3600 |

**SS:** Stainless steel
**FeZn:** Zinc plated steel

Spindle material

| Part # SS | Part # FeZn | D | A | K | TH | L | A | C | Type | LBS |
|---|---|---|---|---|---|---|---|---|---|---|
| 91301Y | 91301ZY | 3.94 | 5/8-11 | 0.51 | 3.94 | 2.64 | 2.92 | 0.51 | X | 3375 |
| 91302Y | 91302ZY | 3.94 | 5/8-11 | 0.51 | 5.9 | 4.61 | 2.92 | 0.51 | X | 3375 |
| 91303Y | 91303ZY | 3.94 | 5/8-11 | 0.51 | 7.87 | 6.57 | 2.92 | 0.51 | X | 3375 |
| 91402Y | 91402ZY | 3.94 | 3/4-10 | 0.63 | 6.89 | 5.59 | 2.92 | 0.51 | X | 3600 |
| 91403Y | 91403ZY | 3.94 | 3/4-10 | 0.63 | 8.86 | 7.56 | 2.92 | 0.51 | X | 3600 |
| 91402HY | 91402ZHY | 3.94 | 3/4-10 | 0.79 | 6.89 | 5.59 | 2.92 | 0.51 | Y | 3600 |
| 91403HY | 91403ZHY | 3.94 | 3/4-10 | 0.79 | 8.86 | 7.56 | 2.92 | 0.51 | Y | 3600 |
| 91502Y | 91502ZY | 3.94 | 1-8 | 0.75 | 6.89 | 5.59 | 2.92 | 0.51 | X | 4050 |
| 91503Y | 91503ZY | 3.94 | 1-8 | 0.75 | 8.86 | 7.56 | 2.92 | 0.51 | X | 4050 |

**SS:** Stainless steel
**FeZn:** Zinc plated steel

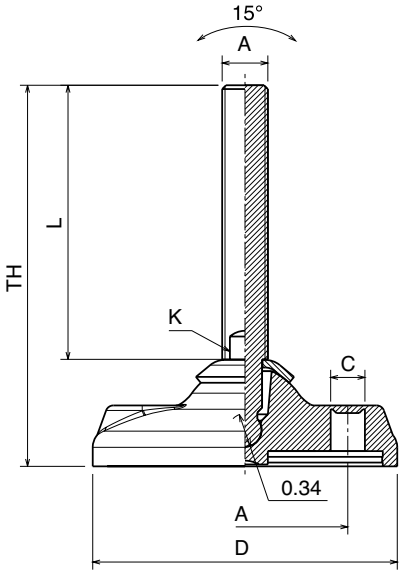


Spindle material

| Part # SS | Part # FeZn | D | A | K | TH | L | A | C | Type | LBS |
|---|---|---|---|---|---|---|---|---|---|---|
| 91601Y | 91601ZY | 4.72 | 5/8-11 | 0.51 | 3.94 | 2.64 | 3.55 | 0.51 | X | 3375 |
| 91602Y | 91602ZY | 4.72 | 5/8-11 | 0.51 | 5.9 | 4.61 | 3.55 | 0.51 | X | 3375 |
| 91603Y | 91603ZY | 4.72 | 5/8-11 | 0.51 | 7.87 | 6.57 | 3.55 | 0.51 | X | 3375 |
| 91702Y | 91702ZY | 4.72 | 3/4-10 | 0.63 | 6.89 | 5.59 | 3.55 | 0.51 | X | 3600 |
| 91703Y | 91703ZY | 4.72 | 3/4-10 | 0.63 | 8.86 | 7.56 | 3.55 | 0.51 | X | 3600 |
| 91702HY | 91702ZHY | 4.72 | 3/4-10 | 0.79 | 6.89 | 5.59 | 3.55 | 0.51 | Y | 3600 |
| 91703HY | 91703ZHY | 4.72 | 3/4-10 | 0.79 | 8.86 | 7.56 | 3.55 | 0.51 | Y | 3600 |
| 91802Y | 91802ZY | 4.72 | 1-8 | 0.75 | 6.89 | 5.59 | 3.55 | 0.51 | X | 4050 |
| 91803Y | 91803ZY | 4.72 | 1-8 | 0.75 | 8.86 | 7.56 | 3.55 | 0.51 | X | 4050 |

**SS:** Stainless steel
**FeZn:** Zinc plated steel

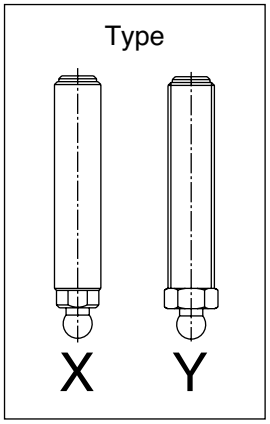

## Leveler diam. 110 mm

Spindle material

| Part # SS | Part # FeZn | A | K | TH | L | LBS |
|---|---|---|---|---|---|---|
| **94301HY** | **94301ZHY** | 5/8-11 | 0.79 | 6.1 | 4.53 | 3375 |
| **94302HY** | **94302ZHY** | 5/8-11 | 0.79 | 7.28 | 5.71 | 3375 |
| **94303HY** | **94303ZHY** | 5/8-11 | 0.79 | 9.25 | 7.68 | 3375 |
| **94401HY** | **94401ZHY** | 3/4-10 | 0.79 | 6.1 | 4.53 | 3375 |
| **94402HY** | **94402ZHY** | 3/4-10 | 0.79 | 7.28 | 5.71 | 3375 |
| **94403HY** | **94403ZHY** | 3/4-10 | 0.79 | 9.25 | 7.68 | 3375 |
| **94501HY** | **94501ZHY** | 1-8 | 0.95 | 6.1 | 4.53 | 4050 |
| **94502HY** | **94502ZHY** | 1-8 | 0.95 | 7.28 | 5.71 | 4050 |
| **94503HY** | **94503ZHY** | 1-8 | 0.95 | 9.25 | 7.68 | 4050 |

**SS:** Stainless steel
**FeZn:** Zinc plated steel

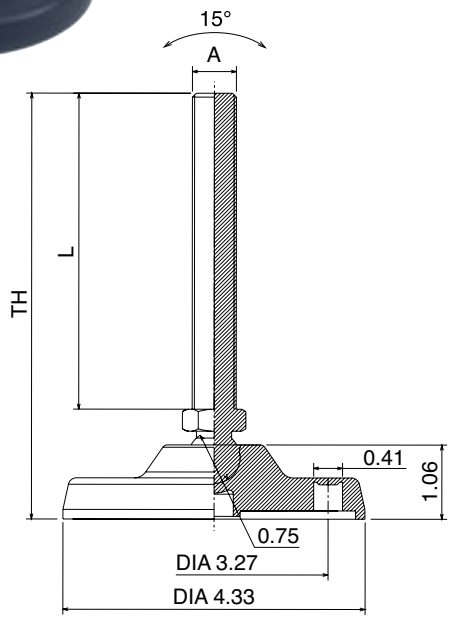


## Leveler diam. 4.84

Spindle material

| Part # SS | Part # FeZn | A | K | TH | L | LBS |
|---|---|---|---|---|---|---|
| **94801HY** | **94801ZHY** | 5/8-11 | 0.79 | 6.89 | 4.53 | 5620 |
| **94802HY** | **94802ZHY** | 5/8-11 | 0.79 | 8.07 | 5.71 | 5620 |
| **94803HY** | **94803ZHY** | 5/8-11 | 0.79 | 10.04 | 7.68 | 5620 |
| **94901HY** | **94901ZHY** | 3/4-10 | 0.79 | 6.89 | 4.53 | 5620 |
| **94902HY** | **94902ZHY** | 3/4-10 | 0.79 | 8.07 | 5.71 | 5620 |
| **94903HY** | **94903ZHY** | 3/4-10 | 0.79 | 10.04 | 7.68 | 5620 |
| **95001HY** | **95001ZHY** | 1-8 | 0.95 | 6.89 | 4.53 | 5620 |
| **95002HY** | **95002ZHY** | 1-8 | 0.95 | 8.07 | 5.71 | 5620 |
| **95003HY** | **95003ZHY** | 1-8 | 0.95 | 10.04 | 7.68 | 5620 |

**SS:** Stainless steel
**FeZn:** Zinc plated steel

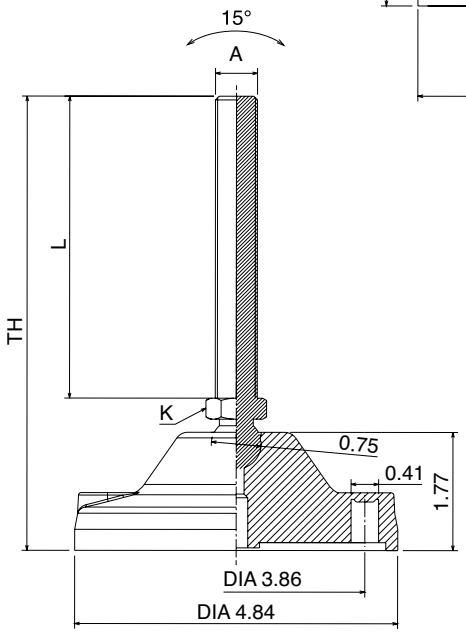

## Leveler dia 4.84

| | Spindle material | | | | | | |
|---|---|---|---|---|---|---|---|
| Part | Art.-Nr. SS | Art.-Nr. FeZn | A | K | TH | L | LBS |
| 958 | 95802HY | 95802ZHY | 3/4-10 | 0.79 | 7.87 | 5.83 | 6750 |
| 958 | 95803HY | 95803ZHY | 3/4-10 | 0.79 | 9.84 | 7.79 | 6750 |
| 959 | 95902HY | 95902ZHY | 1-8 | 0.95 | 7.87 | 5.83 | 6750 |
| 959 | 95903HY | 95903ZHY | 1-8 | 0.95 | 9.84 | 7.79 | 6750 |

**SS:** Stainless steel
**FeZn:** Zinc plated steel

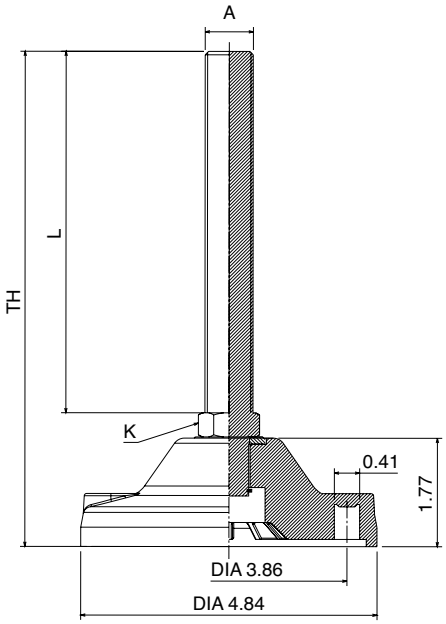


## ACCESSORIES

### Anti-slip pad

| Part # | For base |
|---|---|
| 99601 | Dia. 1.58 |
| 99602 | Dia. 1.97 |
| 99603 | Dia. 2.36 |
| 99604 | Dia. 3.15 |
| 99605 | Dia. 3.94 |
| 99607 | Dia. 4.33 |
| 99606 | Dia. 4.72 |
| 99608 | Dia. 4.84 |

### Stainless steel nuts

| Part # | Spindle |
|---|---|
| 99801Y | 3/8-16 |
| 99802Y | 1/2-13 |
| 99804Y | 5/8-11 |
| 99805Y | 3/4-10 |
| 99806Y | 1-8 |

# Easy Clean Leveler

## Leveler dia 1.97

| Part # | D | A | K | TH | L | LBS |
|---|---|---|---|---|---|---|
| **91902Y** | 1.97 | 1/2-13 | 0.35 | 3.94 | 2.95 | 675 |
| **91903Y** | 1.97 | 1/2-13 | 0.35 | 5.91 | 4.92 | 675 |
| **92002Y** | 1.97 | 5/8-11 | 0.51 | 5.51 | 4.53 | 675 |
| **92003Y** | 1.97 | 5/8-11 | 0.51 | 7.48 | 6.5 | 675 |
| **92103Y** | 1.97 | 3/4-10 | 0.63 | 6.5 | 5.51 | 675 |

## Leveler dia 2.95

| Part # | D | A | K | TH | L | LBS |
|---|---|---|---|---|---|---|
| **92202Y** | 2.95 | 1/2-13 | 0.35 | 4.13 | 2.95 | 1800 |
| **92203Y** | 2.95 | 1/2-13 | 0.35 | 6.1 | 4.92 | 1800 |
| **92302Y** | 2.95 | 5/8-11 | 0.51 | 5.7 | 4.53 | 1800 |
| **92303Y** | 2.95 | 5/8-11 | 0.51 | 7.68 | 6.5 | 1800 |
| **92403Y** | 2.95 | 3/4-10 | 0.63 | 6.69 | 5.51 | 1800 |

## Leveler dia 3.94

| Part # | D | A | K | TH | L | LBS |
|---|---|---|---|---|---|---|
| **92502Y** | 3.94 | 5/8-11 | 0.51 | 5.9 | 4.53 | 4500 |
| **92503Y** | 3.94 | 5/8-11 | 0.51 | 7.87 | 6.5 | 4500 |
| **92602Y** | 3.94 | 3/4-10 | 0.63 | 6.89 | 5.51 | 4500 |
| **92603Y** | 3.94 | 3/4-10 | 0.63 | 8.86 | 7.48 | 4500 |
| **92703Y** | 3.94 | 1-8 | 0.75 | 8.86 | 7.48 | 4500 |

## Leveler dia 4.97

| Part # | D | A | K | TH | L | LBS |
|---|---|---|---|---|---|---|
| **92802Y** | 4.97 | 3/4-10 | 0.63 | 7.1 | 5.51 | 6750 |
| **92803Y** | 4.97 | 3/4-10 | 0.63 | 9.05 | 7.48 | 6750 |
| **92903Y** | 4.97 | 1-8 | 0.75 | 9.05 | 7.48 | 6750 |

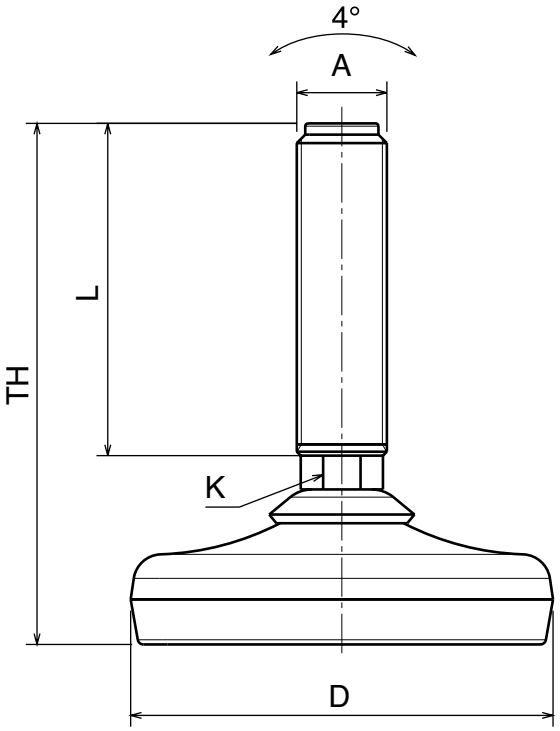

# Easy Clean Leveler with Fixing Hole

## Leveler dia 2.95 with fixing holes

| Part # | D | A | K | TH | L | LBS |
|---|---|---|---|---|---|---|
| **93402Y** | 2.95 | 1/2-13 | 0.35 | 4.13 | 2.95 | 1800 |
| **93403Y** | 2.95 | 1/2-13 | 0.35 | 6.1 | 4.92 | 1800 |
| **93502Y** | 2.95 | 5/8-11 | 0.51 | 5.7 | 4.53 | 1800 |
| **93503Y** | 2.95 | 5/8-11 | 0.51 | 7.68 | 6.5 | 1800 |
| **93603Y** | 2.95 | 3/4-10 | 0.63 | 6.69 | 5.51 | 1800 |

## Leveler dia 3.94 with fixing holes

| Article-Nr. | D | A | K | TH | L | LBS |
|---|---|---|---|---|---|---|
| **93702Y** | 3.94 | 5/8-11 | 0.51 | 5.9 | 4.53 | 4500 |
| **93703Y** | 3.94 | 5/8-11 | 0.51 | 7.87 | 6.5 | 4500 |
| **93802Y** | 3.94 | 3/4-10 | 0.63 | 6.89 | 5.51 | 4500 |
| **93803Y** | 3.94 | 3/4-10 | 0.63 | 8.86 | 7.48 | 4500 |
| **93903Y** | 3.94 | 1-8 | 0.75 | 8.86 | 7.48 | 4500 |

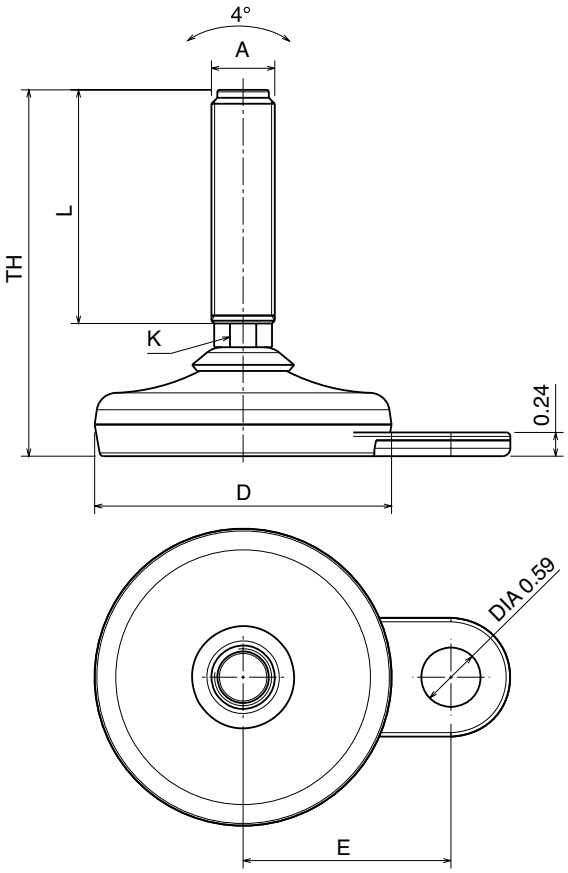

# UCFL Bearing Support

Solid Housing

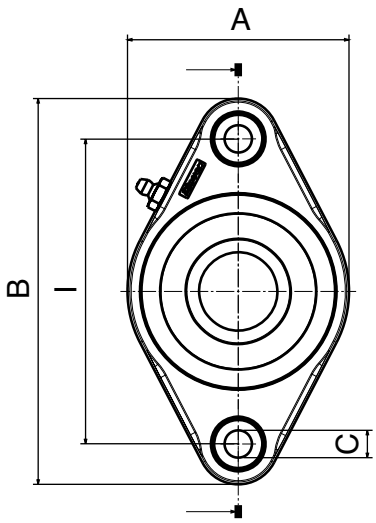


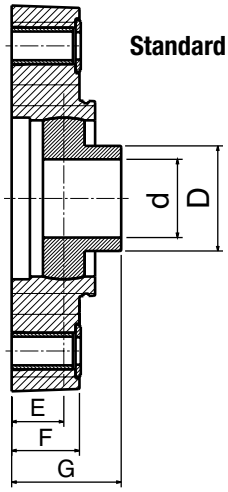


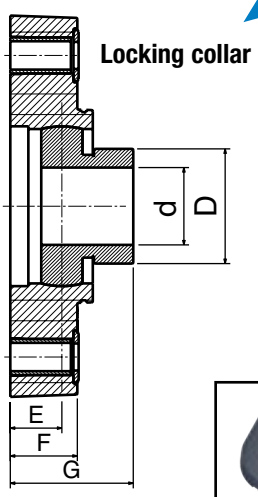

Safety Cap

## Standard insert

Chrome steel

| Part # | Series | d | I | A | B | C | D | E | F | G | Article- |
|---|---|---|---|---|---|---|---|---|---|---|---|
| **82210Q** | UCFL204 | 3/4 | 3.54 | 2.44 | 4.57 | 0.43 | 1.14 | 0.63 | 0.79 | 1.34 | **89004** |
| **82211Q** | UCFL205 | 1 | 3.90 | 2.79 | 5.12 | 0.43 | 1.34 | 0.66 | 0.88 | 1.43 | **89001** |
| **82212Q** | UCFL206 | 1.1/4 | 4.61 | 3.35 | 5.83 | 0.43 | 1.59 | 0.79 | 1.02 | 1.65 | **89002** |
| **82213Q** | UCFL207 | 1.7/16 | 5.12 | 3.66 | 6.38 | 0.43 | 1.89 | 0.77 | 1.02 | 1.69 | **89003** |
| **82204Q** | UCFL208/117 | 1.1/2 | 4.81 | 3.66 | 5.83 | 0.43 | 2.09 | 0.75 | 1.02 | 1.73 | **89003** |

## Standard insert

Stainless steel

| Part # | Series | d | I | A | B | C | D | E | F | G | Article- |
|---|---|---|---|---|---|---|---|---|---|---|---|
| **82210SSQ** | UCFL204 | 3/4 | 3.54 | 2.44 | 4.57 | 0.43 | 1.14 | 0.63 | 0.79 | 1.34 | **89004** |
| **82211SSQ** | UCFL205 | 1 | 3.90 | 2.79 | 5.12 | 0.43 | 1.34 | 0.66 | 0.88 | 1.43 | **89001** |
| **82212SSQ** | UCFL206 | 1.1/4 | 4.61 | 3.35 | 5.83 | 0.43 | 1.59 | 0.79 | 1.02 | 1.65 | **89002** |
| **82213SSQ** | UCFL207 | 1.7/16 | 5.12 | 3.66 | 6.38 | 0.43 | 1.89 | 0.77 | 1.02 | 1.69 | **89003** |
| **82204SSQ** | UCFL208/117 | 1.1/2 | 4.81 | 3.66 | 5.83 | 0.43 | 2.09 | 0.75 | 1.02 | 1.73 | **89003** |

## Insert with locking collar

Chrome steel

| Part # | Series | d | I | A | B | C | D | E | F | G | Article- |
|---|---|---|---|---|---|---|---|---|---|---|---|
| **82310Q** | UCFL204 | 3/4 | 3.54 | 2.44 | 4.57 | 0.43 | 1.31 | 0.63 | 0.79 | 1.57 | **89004** |
| **82311Q** | UCFL205 | 1 | 3.90 | 2.79 | 5.12 | 0.43 | 1.50 | 0.66 | 0.88 | 1.58 | **89001** |
| **82312Q** | UCFL206 | 1.1/4 | 4.61 | 3.35 | 5.83 | 0.43 | 1.75 | 0.79 | 1.02 | 1.88 | **89002** |
| **82313Q** | UCFL207 | 1.7/16 | 5.12 | 3.66 | 6.38 | 0.43 | 2.19 | 0.77 | 1.02 | 1.96 | **89003** |
| **82304Q** | UCFL208/117 | 1.1/2 | 4.81 | 3.66 | 5.83 | 0.43 | 2.37 | 0.75 | 1.02 | 2.11 | **89003** |

## COMPONENTS

- Housing in reinforced polyamide, with higher load capacity and good resistance to corrosive chemicals such as water, oils, petrol and alcoholic beverages. All our bearings can be used at temperatures between 0°C and +80°C.
- Ball bearings are made in chrome steel. They are also available, upon request , in stainless steel. Max misalignment between shaft and housing: 2.5°.
- Grease nipple are made in nickel plated steel, but they can also be made in stainless steel on the stainless steel bearing.
- Spacers from nickel plated brass to reinforce fixing holes.
- Washer stainless steel.

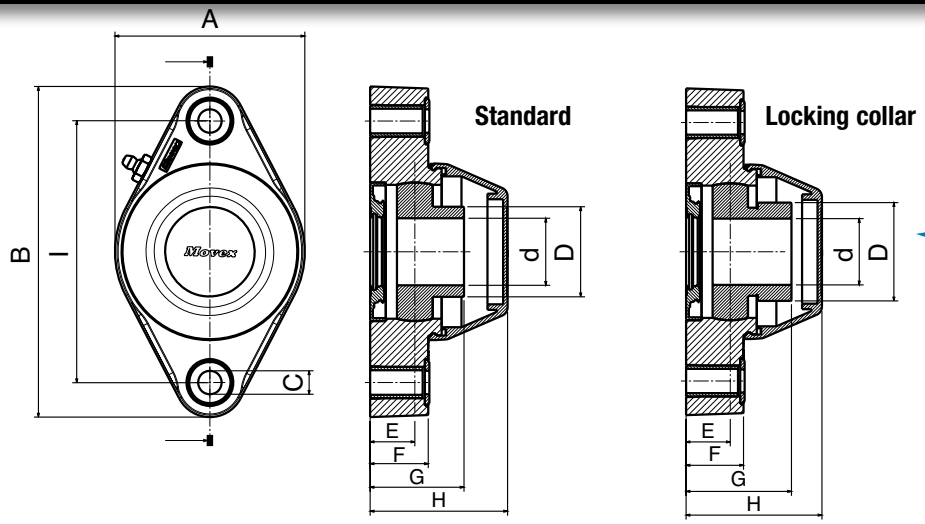


Solid Housing

## Standard insert, sealed, open and close version

| | Part | Art-close | Part | Art-open | Series | d | I | A | B | C | D | E | F | G | H |
|---|---|---|---|---|---|---|---|---|---|---|---|---|---|---|---|
| Chrome steel | 824 | 82410Q | 825 | 82510Q | UCFL204 | 3/4 | 3.54 | 2.44 | 4.57 | 0.43 | 1.14 | 0.63 | 0.79 | 1.34 | 2.03 |
| | 824 | 82411Q | 825 | 82511Q | UCFL205 | 1 | 3.90 | 2.79 | 5.12 | 0.43 | 1.34 | 0.66 | 0.88 | 1.43 | 2.05 |
| | 824 | 82412Q | 825 | 82512Q | UCFL206 | 1.1/4 | 4.61 | 3.35 | 5.83 | 0.43 | 1.59 | 0.79 | 1.02 | 1.65 | 2.42 |
| | 824 | 82413Q | 825 | 82513Q | UCFL207 | 1.7/16 | 5.12 | 3.66 | 6.38 | 0.43 | 1.89 | 0.77 | 1.02 | 1.69 | 2.62 |
| | 824 | 82404Q | 825 | 82504Q | UCFL208/117 | 1.1/2 | 4.81 | 3.66 | 5.83 | 0.43 | 2.09 | 0.75 | 1.02 | 1.73 | 2.62 |

## Standard insert, sealed, open and close version

| | Part | Art-close | Part | Art-open | Series | d | I | A | B | C | D | E | F | G | H |
|---|---|---|---|---|---|---|---|---|---|---|---|---|---|---|---|
| Stainless steel | 824 | 82410SSQ | 825 | 82510SSQ | UCFL204 | 3/4 | 3.54 | 2.44 | 4.57 | 0.43 | 1.14 | 0.63 | 0.79 | 1.34 | 2.03 |
| | 824 | 82411SSQ | 825 | 82511SSQ | UCFL205 | 1 | 3.90 | 2.79 | 5.12 | 0.43 | 1.34 | 0.66 | 0.88 | 1.43 | 2.05 |
| | 824 | 82412SSQ | 825 | 82512SSQ | UCFL206 | 1.1/4 | 4.61 | 3.35 | 5.83 | 0.43 | 1.59 | 0.79 | 1.02 | 1.65 | 2.42 |
| | 824 | 82413SSQ | 825 | 82513SSQ | UCFL207 | 1.7/16 | 5.12 | 3.66 | 6.38 | 0.43 | 1.89 | 0.77 | 1.02 | 1.69 | 2.62 |
| | 824 | 82404SSQ | 825 | 82504SSQ | UCFL208/117 | 1.1/2 | 4.81 | 3.66 | 5.83 | 0.43 | 2.09 | 0.75 | 1.02 | 1.73 | 2.62 |

## "Long life" insert, sealed, open and close version

| | Part | Art-close | Part | Art-open | Series | d | I | A | B | C | D | E | F | G | H |
|---|---|---|---|---|---|---|---|---|---|---|---|---|---|---|---|
| Chrome steel | 824 | 82410LQ | 825 | 82510LQ | UCFL204 | 3/4 | 3.54 | 2.44 | 4.57 | 0.43 | 1.14 | 0.63 | 0.79 | 1.34 | 2.03 |
| | 824 | 82411LQ | 825 | 82511LQ | UCFL205 | 1 | 3.90 | 2.79 | 5.12 | 0.43 | 1.34 | 0.66 | 0.88 | 1.43 | 2.05 |
| | 824 | 82412LQ | 825 | 82512LQ | UCFL206 | 1.1/4 | 4.61 | 3.35 | 5.83 | 0.43 | 1.59 | 0.79 | 1.02 | 1.65 | 2.42 |
| | 824 | 82413LQ | 825 | 82513LQ | UCFL207 | 1.7/16 | 5.12 | 3.66 | 6.38 | 0.43 | 1.89 | 0.77 | 1.02 | 1.69 | 2.62 |
| | 824 | 82404LQ | 825 | 82504LQ | UCFL208/117 | 1.1/2 | 4.81 | 3.66 | 5.83 | 0.43 | 2.09 | 0.75 | 1.02 | 1.73 | 2.62 |

## Insert with locking collar, sealed, open and close version

| | Part | Art-close | Part | Art-open | Series | d | I | A | B | C | D | E | F | G | H |
|---|---|---|---|---|---|---|---|---|---|---|---|---|---|---|---|
| Chrome steel | 826 | 82610Q | 827 | 82710Q | UCFL204 | 3/4 | 3.54 | 2.44 | 4.57 | 0.43 | 1.31 | 0.63 | 0.79 | 1.57 | 2.03 |
| | 826 | 82611Q | 827 | 82711Q | UCFL205 | 1 | 3.90 | 2.79 | 5.12 | 0.43 | 1.50 | 0.66 | 0.88 | 1.58 | 2.05 |
| | 826 | 82612Q | 827 | 82712Q | UCFL206 | 1.1/4 | 4.61 | 3.35 | 5.83 | 0.43 | 1.75 | 0.79 | 1.02 | 1.88 | 2.42 |
| | 826 | 82613Q | 827 | 82713Q | UCFL207 | 1.7/16 | 5.12 | 3.66 | 6.38 | 0.43 | 2.19 | 0.77 | 1.02 | 1.96 | 2.62 |
| | 826 | 82604Q | 827 | 82704Q | UCFL208/117 | 1.1/2 | 4.81 | 3.66 | 5.83 | 0.43 | 2.37 | 0.75 | 1.02 | 2.11 | 2.62 |

## COMPONENTS

- Housing in reinforced polyamide, with higher load capacity and good resistance to corrosive chemicals such as water, oils, petrol and alcoholic beverages. All our bearings can be used at temperatures between 0°C and +80°C.
- Ball bearings are made in chrome steel. They are also available, upon request, in stainless steel. Max misalignment between shaft and housing: 2.5°.
- Grease nipple are made in nickel plated stell, but they can also be made in stainless steel on the stainless steel bearing.
- Spacers from nickel plated brass to reinforce fixing holes.
- Washer stainless steel.
- Clip-on safety cap in Polyethylene.
- Rotary shaft seal ring in NBR rubber.
- O-ring in NBR rubber.

# UCF Bearing Support

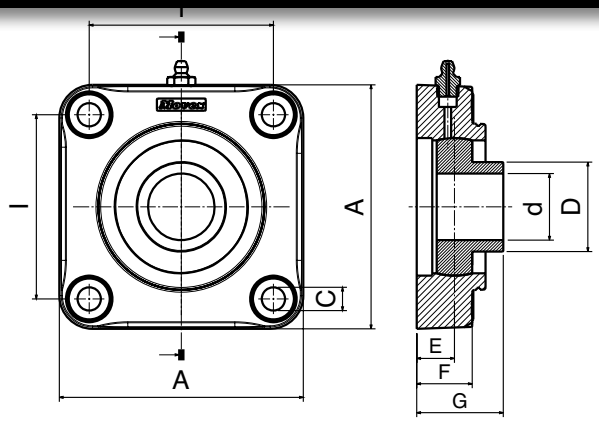


Standard insert

Solid Housing

Safety Cap

| | Part # | Series | d | I | A | C | D | E | F | G | Article-Nr. |
|---|---|---|---|---|---|---|---|---|---|---|---|
| Chrome steel | **82801Q** | UCF205 | 1 | 2.76 | 3.86 | 0.43 | 1.34 | 0.63 | 0.87 | 1.40 | **89001** |
| | **82802Q** | UCF206 | 1.1/4 | 3.27 | 4.33 | 0.43 | 1.59 | 0.667 | 0.98 | 1.53 | **89002** |
| | **82813Q** | UCF207 | 1.7/16 | 3.62 | 4.65 | 0.43 | 1.89 | 0.79 | 0.98 | 1.71 | **89003** |
| | **82804Q** | UCF208/83 | 1.1/2 | 3.27 | 4.33 | 0.43 | 2.09 | 0.75 | 0.98 | 1.75 | **89003** |

Standard insert

| | Part #. | Series | d | I | A | C | D | E | F | G | Article-Nr. |
|---|---|---|---|---|---|---|---|---|---|---|---|
| Stainless steel | **82801SSQ** | UCF205 | 1 | 2.76 | 3.86 | 0.43 | 1.34 | 0.63 | 0.87 | 1.40 | **89001** |
| | **82802SSQ** | UCF206 | 1.1/4 | 3.27 | 4.33 | 0.43 | 1.59 | 0.667 | 0.98 | 1.53 | **89002** |
| | **82813SSQ** | UCF207 | 1.7/16 | 3.62 | 4.65 | 0.43 | 1.89 | 0.79 | 0.98 | 1.71 | **89003** |
| | **82804SSQ** | UCF208/83 | 1.1/2 | 3.27 | 4.33 | 0.43 | 2.09 | 0.75 | 0.98 | 1.75 | **89003** |

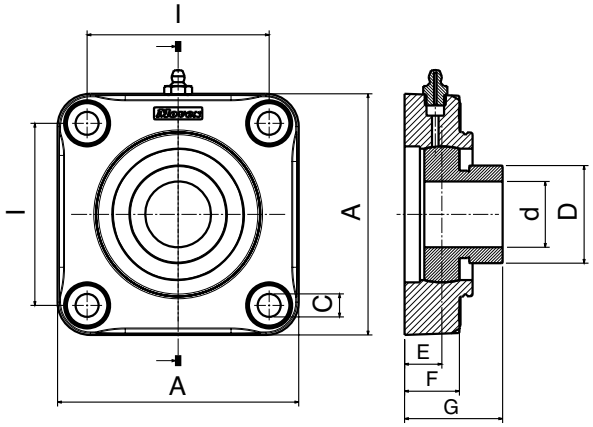


Insert with locking collar

Safety Cap

| | Part # | Series0 | d | I | A | C | D | E | F | G | Article-Nr. |
|---|---|---|---|---|---|---|---|---|---|---|---|
| Chrome steel | **82901Q** | UCF205 | 1 | 2.76 | 3.86 | 0.43 | 1.50 | 0.63 | 0.87 | 1.55 | **89001** |
| | **82902Q** | UCF206 | 1.1/4 | 3.27 | 4.33 | 0.43 | 1.75 | 0.667 | 0.98 | 1.76 | **89002** |
| | **82913Q** | UCF207 | 1.7/16 | 3.62 | 4.65 | 0.43 | 2.19 | 0.79 | 0.98 | 1.98 | **89003** |
| | **82904Q** | UCF208/83 | 1.1/2 | 3.27 | 4.33 | 0.43 | 2.37 | 0.75 | 0.98 | 2.13 | **89003** |

## COMPONENTS

- Housing in reinforced polyamide, with higher load capacity and good resistance to corrosive chemicals such as water, oils, petrol and alcoholic beverages. All our bearings can be used at temperatures between 0°C and +80°C.
- Ball bearings are made in chrome steel. They are also available, upon request , in stainless steel. Max misalignment between shaft and housing: 2.5°.
- Grease nipple are made in nickel plated steel, but they can also be made in stainless steel on the stainless steel bearing.
- Spacers from nickel plated brass to reinforce fixing holes.
- Washer stainless steel.

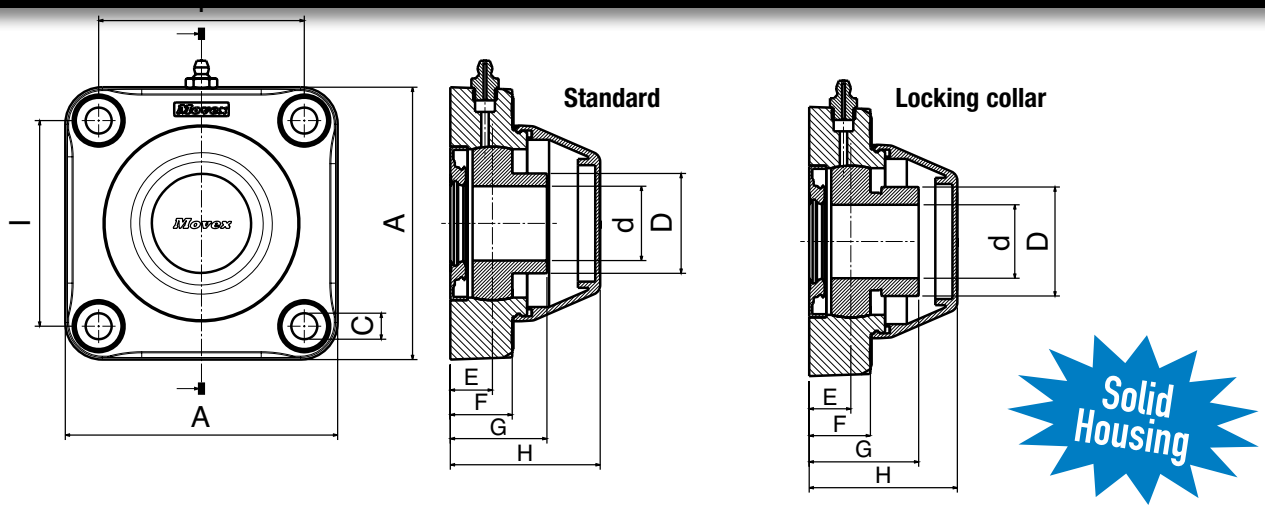


## Standard insert, sealed, open and close version

| | Part | Art-close | Part | Art-open | Series | d | I | A | C | D | E | F | G | H |
|---|---|---|---|---|---|---|---|---|---|---|---|---|---|---|
| Chrome steel | 830 | 83001Q | 831 | 83101Q | UCF205 | 1 | 2.76 | 3.86 | 0.43 | 1.34 | 0.63 | 0.87 | 1.40 | 2.03 |
| | 830 | 83002Q | 831 | 83102Q | UCF206 | 1.1/4 | 3.27 | 4.33 | 0.43 | 1.59 | 0.667 | 0.98 | 1.53 | 2.38 |
| | 830 | 83013Q | 831 | 83113Q | UCF207 | 1.7/16 | 3.62 | 4.65 | 0.43 | 1.89 | 0.79 | 0.98 | 1.71 | 2.58 |
| | 830 | 83004Q | 831 | 83104Q | UCF208/83 | 1.1/2 | 3.27 | 4.33 | 0.43 | 2.09 | 0.75 | 0.98 | 1.75 | 2.58 |

## Standard insert, sealed, open and close version

| | | | | | | | | | | | | | | |
|---|---|---|---|---|---|---|---|---|---|---|---|---|---|---|
| Stainless steel | 830 | 83001SSQ | 831 | 83101SSQ | UCF205 | 1 | 2.76 | 3.86 | 0.43 | 1.34 | 0.63 | 0.87 | 1.40 | 2.03 |
| | 830 | 83002SSQ | 831 | 83102SSQ | UCF206 | 1.1/4 | 3.27 | 4.33 | 0.43 | 1.59 | 0.667 | 0.98 | 1.53 | 2.38 |
| | 830 | 83013SSQ | 831 | 83113SSQ | UCF207 | 1.7/16 | 3.62 | 4.65 | 0.43 | 1.89 | 0.79 | 0.98 | 1.71 | 2.58 |
| | 830 | 83004SSQ | 831 | 83104SSQ | UCF208/83 | 1.1/2 | 3.27 | 4.33 | 0.43 | 2.09 | 0.75 | 0.98 | 1.75 | 2.58 |

## "Long life" insert, sealed, open and close version

| | Part | Art-close | Part | Art-open | Series | d | I | A | C | D | E | F | G | H |
|---|---|---|---|---|---|---|---|---|---|---|---|---|---|---|
| Chrome steel | 830 | 83001LQ | 831 | 83101LQ | UCF205 | 1 | 2.76 | 3.86 | 0.43 | 1.34 | 0.63 | 0.87 | 1.40 | 2.03 |
| | 830 | 83002LQ | 831 | 83102LQ | UCF206 | 1.1/4 | 3.27 | 4.33 | 0.43 | 1.59 | 0.667 | 0.98 | 1.53 | 2.38 |
| | 830 | 83013LQ | 831 | 83113LQ | UCF207 | 1.7/16 | 3.62 | 4.65 | 0.43 | 1.89 | 0.79 | 0.98 | 1.71 | 2.58 |
| | 830 | 83004LQ | 831 | 83104LQ | UCF208/83 | 1.1/2 | 3.27 | 4.33 | 0.43 | 2.09 | 0.75 | 0.98 | 1.75 | 2.58 |

## Insert with locking collar, sealed, open and close version

| | Part | Art-close | Part | Art-open | Series | d | I | A | C | D | E | F | G | H |
|---|---|---|---|---|---|---|---|---|---|---|---|---|---|---|
| Chrome steel | 832 | 83201Q | 833 | 83301Q | UCF205 | 1 | 2.76 | 3.86 | 0.43 | 1.50 | 0.63 | 0.87 | 1.55 | 2.03 |
| | 832 | 83202Q | 833 | 83302Q | UCF206 | 1.1/4 | 3.27 | 4.33 | 0.43 | 1.75 | 0.667 | 0.98 | 1.76 | 2.38 |
| | 832 | 83213Q | 833 | 83313Q | UCF207 | 1.7/16 | 3.62 | 4.65 | 0.43 | 2.19 | 0.79 | 0.98 | 1.98 | 2.58 |
| | 832 | 83204Q | 833 | 83304Q | UCF208/83 | 1.1/2 | 3.27 | 4.33 | 0.43 | 2.37 | 0.75 | 0.98 | 2.13 | 2.58 |

## COMPONENTS

- Housing in reinforced polyamide, with higher load capacity and good resistance to corrosive chemicals such as water, oils, petrol and alcoholic beverages. All our bearings can be used at temperatures between 0°C and +80°C.
- Ball bearings are made in chrome steel. They are also available, upon request, in stainless steel. Max misalignment between shaft and housing: 2.5°.
- Grease nipple are made in nickel plated stell, but they can also be made in stainless steel on the stainless steel bearing.
- Spacers from nickel plated brass to reinforce fixing holes.
- Washer stainless steel.
- Clip-on safety cap in Polyethylene.
- Rotary shaft seal ring in NBR rubber.
- O-ring in NBR rubber.

# Material Compatibility, Properties and USDA/FDA Acceptance

| 8/31/16 | HDPE | UHMW | REPRO/UHMW | OF/UHMW | HT/UHMW |
|---|---|---|---|---|---|
| MATERIAL CHARACTERISTICS | | | | | |
| CHEMICALS | | | | | |
| WEAK ACIDS | 1 | 1 | 1 | 1 | 1 |
| STRONG ACIDS | 1 | 1 | 2 | 2 | 1 |
| WEAK ALKALIS | 1 | 1 | 1 | 1 | 1 |
| STRONG ALKALIS | 1 | 1 | 1 | 1 | 1 |
| AROMATIC HYDROCARBONS | 3 | 2 | 3 | 3 | 2 |
| ALIPHATIC HYDROCARBONS | 3 | 1 | 1 | 1 | 1 |
| KETONES | 3 | 1 | 2 | 2 | 1 |
| ETHERS | 3 | 2 | | 2 | 2 |
| ESTERS | 3 | 2 | 2 | 2 | 2 |
| ALCOHOLS | 1 | 1 | 1 | 1 | 1 |
| INORGANIC SALT SOLUTIONS | 1 | | 1 | | |
| CONTINUOUS SUNLIGHT | 2 | 2 | 2 | 2 | 2 |
| WATER ABSORPTION IMMERSION | <.01 | <.01 | <.01 | <.01 | <.01 |
| MECHANICAL PROPERTIES | | | | | |
| LIMITING PV | | 2000 | 3000 | 2000 | 2000 |
| HARDNESS ROCKWELL | | R56 | | | R57 |
| HARDNESS DUROMETER | 72 | D66 | D67 | D64 | D68 |
| COEFFICIENT OF FRICTION | 0.2 | 0.12 | 0.14 | 0.14 | 0.12 |
| THERMAL PROPERTIES | | | | | |
| CONTINUOUS SERVICE TEMP F | 180 | 180 | 180 | 180 | 275 |
| HEAT DEFLECTION TEMP F | 176 | 116 | 116 | 116 | 116 |
| COEFFICIENT OF THERMAL EXPANSION | 61µin/in - °F | 110µin/in - °F | 110µin/in - °F | 110µin/in - °F | 110µin/in - °F |
| THERMAL CONDUCTIVITY | | 2.84 | | 2.84 | 2.84 |
| COLOR | WHITE | WHITE | BLACK/GREEN | DARK BROWN/GREY | WHITE |
| ACCEPTANCE | | | | | |
| FDA | X | X | | X | X |
| USDA | X | X | | X | X |
| 3A DAIRY | | X | | X | X |
| NSF | | | | | |

| MATERIAL | ERTALYTE | ERTALYTE TX | ACETAL | DELRIN |
|---|---|---|---|---|
| MATERIAL CHARACTERISTICS | | | | |
| CHEMICALS | | | | |
| WEAK ACIDS | 1 | 1 | 2 | 2 |
| STRONG ACIDS | 2 | 2 | 3 | 3 |
| WEAK ALKALIS | 1 | 1 | 1 | 1 |
| STRONG ALKALIS | 3 | 3 | 3 | 3 |
| AROMATIC HYDROCARBONS | 1 | 1 | 1 | 1 |
| ALIPHATIC HYDROCARBONS | 1 | 1 | 1 | 1 |
| KETONES | 1 | 1 | 1 | 1 |
| ETHERS | 1 | 1 | 1 | 1 |
| ESTERS | 3 | NA | 2 | 2 |
| ALCOHOLS | 1 | 1 | 1 | 1 |
| INORGANIC SALT SOLUTIONS | 1 | 1 | 1 | 1 |
| CONTINUOUS SUNLIGHT | 2 | 2 | 2 | 2 |
| WATER ABSORPTION IMMERSION | <.06 | 0.06 | <0.2 | <0.2 |
| MECHANICAL PROPERTIES | | | | |
| LIMITING PV | 6000 | 6000 | 2700 | 2700 |
| HARDNESS ROCKWELL | M94 | M94 | R120 | R122 |
| HARDNESS DUROMETER | D80 | D80 | D85 | D86 |
| COEFFICIENT OF FRICTION | 0.19 | <.19 | <.25 | <.25 |
| THERMAL PROPERTIES | | | | |
| CONTINUOUS SERVICE TEMP F | 210 | 210 | 180 | 180 |
| CTE | 33µin/in - °F | 45µin/in - °F | 54µin/in - °F | 47µin/in - °F |
| HEAT DEFLECIOTN TEMP F | 180 | 180 | 220 | 250 |
| THERMAL CONDUCTIVITY | 1.9 | 1.9 | 1.6 | 2.5 |
| COLOR | WHITE / BLACK | LIGHT GREY | BLACK/WHITE OTHERS | BLACK / WHITE |
| ACCEPTANCE | | | | |
| FDA | X | X | X | X |
| USDA | X | X | X | X |
| 3A DAIRY | X | X | X | X |
| NSF | | | | |
| FDA21 CFR 175.300 | | | | |

KEY 1= ACCEPTABLE 2= LIMITED 3= UNACCEPTABLE

| CERAM P | NYLON MC907 PA6 | NYLON PA66 | NYLATRON NSM |
|---|---|---|---|
| | | | |
| | | | |
| 1 | 1 | 2 | 2 |
| 2 | 2 | 3 | 3 |
| 1 | 1 | 2 | 2 |
| 1 | 3 | 3 | 2 |
| 3 | 1 | 1 | 1 |
| 1 | 1 | 1 | 1 |
| 2 | 1 | 1 | 1 |
| 1 | 1 | 1 | 1 |
| 2 | 3 | | |
| 1 | 1 | 2 | 2 |
| | 1 | | |
| 2 | 2 | | 2 |
| <.01 | <.6 | <.6 | <.3 |
| | | | |
| 2000 | 3000 | 2700 | 15000 |
| | R115 | R115 | R110 |
| D68 | D85 | D80 | D85 |
| 0.12 | 0.2 | 0.25 | 0.18 |
| | | | |
| 180 | 210 | 210 | 200 |
| 116 | 200 | 200 | 200 |
| 110µin/in - °F | 50µin/in - °F | 55µin/in - °F | 55µin/in - °F |
| 2.84 | 1.7 | 1.7 | |
| LIGHT GREEN | CREAMY WHITE | CREAMY WHITE/BLACK | BLUEGREY |
| | | | |
| | X | X | |
| | X | X | |
| | X | X | |
| | | | |

| TEFLON | FLUOROSINT 207 | FLUORSINT HPV | 1000 PEEK |
|---|---|---|---|
| | | | |
| | | | |
| 1 | 1 | 1 | 1 |
| 1 | 1 | 1 | 2 |
| 1 | 1 | 1 | 1 |
| 1 | 3 | 3 | 1 |
| NA | 1 | 1 | 1 |
| NA | 1 | 1 | 1 |
| 1 | 1 | 1 | 1 |
| NA | 1 | 1 | 1 |
| NA | 1 | 1 | 1 |
| 1 | 1 | 1 | 1 |
| NA | 1 | 1 | 1 |
| NA | 1 | 1 | 2 |
| <.01 | <.03 | <0.1 | <0.1 |
| | | | |
| 1000 | 8000 | 8500 | 8500 |
| | R50 | R54 | R126 |
| D50 | D80 | | D85 |
| <.1 | <.1 | <.15 | <.4 |
| | | | |
| 500 | 500 | 500 | 480 |
| 7.5µin/in - °F | 57µin/in - °F | 49µin/in - °F | 26µin/in - °F |
| 132 | 210 | 180 | 320 |
| 1.7 | | | 1.75 |
| WHITE | WHITE /GREY | LIGHT TAN | LIGHT BEIGE |
| | | | |
| X | | | X |
| X | X | X | X |
| | | | X |
| | | | |
| | X | X | |

## Bearing Clearances and Press Fits

Unless otherwise specified, bearings are made with a running clearance and a press fit. Clearances and Press Fits vary with the bearing size, per the following tables. Wood bearings are provided extra clearance if they are to be used in a wet environment.

### Clearances

| Shaft Diameter Only | All Bearings Except Roll End Bearings | Roll End Bearings Only |
|---|---|---|
| < 1/2" | .002-.010 | .015-.030 |
| 1/2" - 1" | .004-.015 | .015-.030 |
| 1" - 1-1/2" | .004-.020 | .015-.030 |
| 1-1/2" - 3" | .010-.025 | |
| > 3" | .015-.030 | |

### Press Fits

| Bearing OD | Press Fit |
|---|---|
| < 1/2" | .003"-.006" |
| 1/2" - 1-1/2" | .004"-.008" |
| 1-1/2" - 3" | .005"-.010" |
| > 3" | .006"-.012" |

## Helpful Formulae

A useful guideline for determining suitability of a material for an application is the Pressure-Velocity (PV) Value. You can calculate the PV for your application using the formula to the right. Values for comparison are shown on the previous page in the engineering and design data for some common engineering materials.

$$PV = \frac{\text{Load/Bearing} \times \text{RPM}}{4 \times \text{Bearing Length}}$$

Bearing length is used to increase the load capacity of direct journal bearings. Longer bearings tend to have a longer life because they distribute load over a larger surface area than a shorter bearing with the same shaft size.

$$\text{Minimum Bearing Length} = \frac{\text{Load/Bearing} \times \text{RPM}}{4 \times \text{PV Capacity}}$$

## Application Maximization

Assist Slideways in providing the highest value solution for your application by considering how the specifics below will apply to the finished part.

**Application**

- What is the function of the part?
- What material characteristics are most important?
- Is this a new application? What material is being replaced?
- What are the implications of a part failure?
- Is there flexibility in the design?
- Are there special tolerances, press fits or clearances?

**Price/Performance**

- Can improved performance or longer life command a higher price?
- What is the order volume or annual usage?

**Mechanical/Environmental**

- What are the speed and load?
- Is the load constant? Is there any impact?
- What is the operating temperature range?
- Is there exposure to sunlight or chemicals?
- Is FDA compliance required?

**Cosmetic**

- Is color important?
- Are special surface finishes needed?

©2015 Slideways, Inc. All Rights Reserved. Tivar® Clean-Stat, Tivar® Ceram-P, Tivar® DrySlide, Tivar®88, Ertalyte® and Ultem® are trademarks of Quadrant EPP; Delrin® and Teflon® are trademarks of EI Dupont; Lexan® is a trademark of General Electric; Rulon® is a trademark of St. Gobain Performance Plastics Corporation; Torlon® is a trademark of Solvay Advanced Polymers, LLC; Micarta® is a trademark of Norplex-Micarta.

# SLIDEWAYS APPLICATIONS

## Extreme Temperature Applications

Modern plastics have a tremendous range of extreme temperature applications. Current engineered plastics can handle operating temperatures from cryogenic to 800°F. Many of today's plastics are capable of replacing metal materials.

## Corrosive Applications

Slideways components survive daily exposure to corrosive liquids. Our FDA accepted materials see constant washdown conditions in food processing applications. Our materials survive exposure to acids, alkalis and other harsh chemicals.

## Abrasive Environments

Slideways materials are often used in abrasive environments such as the sawmill shown here. Other common environments are glass bottling facilities and paper mills.

## Self-lubricating Requirements

Slideways products provide carefree, self-lubricating performance for applications where lubricants may contaminate or be washed away. Another advantage of the self-lubricating feature is the ability to provide lubrication where re-lubrication is difficult or in environments where lubrication may fail.

## Wear Reduction and More Economical Performance

Slideways plastic components reduce wear, weigh less and last longer than metallic parts. They are lighter and have a lower coefficient of friction, which reduces costly power consumption and extends mating component wear.

# NATIONWIDE REP NETWORK

Production in MA and MI with warehouses in NC and CA

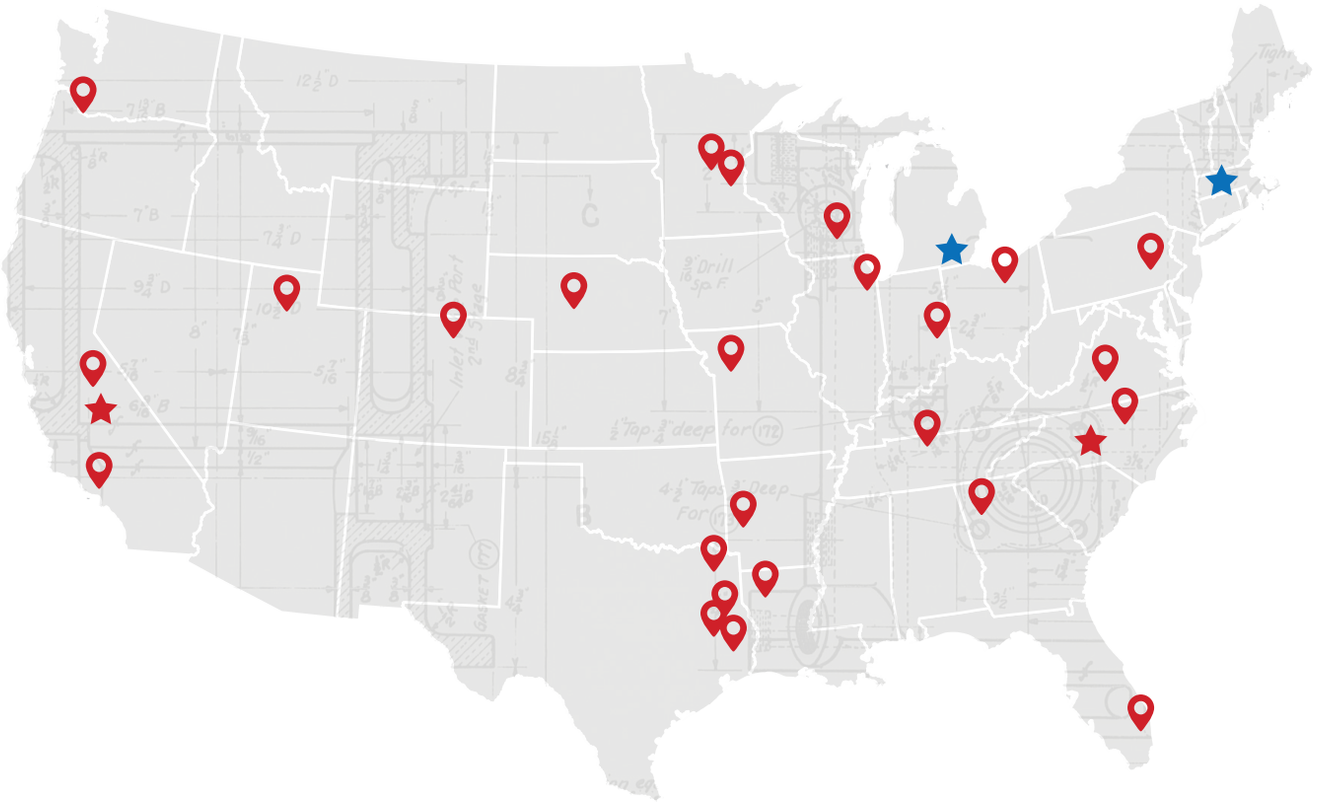

## AVAILABLE ONLINE RESOURCES

**WWW.SLIDEWAYS.COM**

**CATALOG - SW 20**

705 Plantation Street
Worcester, MA 01605 USA
(508) 854-0799
info@slideways.com